제 2013 - 4103 호

안 전 인 증 서

(사업장명) 극동호이스트(주)

(소 재 지) (425-833)경기도 안산시 성곡동630-2 반월공단 B-607-14

위 사업장에서 제조하는 아래의 품목이 산업안전보건법 제34조 및 같은 법 시행규칙 제58조의4제4항에 따른 안전인증 심사 결과 안전·보건기준에 적합하므로 안전인증표시의 사용을 인증합니다.

품 목

호이스트

형식,모델(용량,등급)/인증번호

KDC20_7.5T-MA (20/7.5Ton) /13-AQ2AC-05382

인 증 기 준

고용노동부 고시 제2012 - 33호 (위험기계,기구 의무안전인증 고시)

인 증 조 건

2013년 12월 24일

한국산업안전보건공단이사장

심사결과 통지서

신청인	사업장명	극동호이스트(주)	사업장관리번호	134-81-013350
	사업자등록번호	134-81-01335	대표자 성명	최성찬
	소재지	(425 - 833) 경기도 안산시 성곡동630-2 반월공단 B-607-14		

안전인증대상 기계·기구명	호이스트		
형 식 (규 격)	KDC20_7.5T-MA	용 량 (등 급)	20/7.5 Ton

산업안전보건법 제 34조 및 같은 법 시행규칙 제58조의4에 따라 실시한

[ ] 예비심사

[√] 서면심사

[ ] 기술능력 및 생산체계 심사

[ ] 개별 제품심사

[ ] 개별 제품심사(제작중)

[ ] 형식별 제품심사

결과가 [√] 적 합 / [ ] 부적합 함을 통지합니다.

2013년 12월 17일

인증심사원 강성두 변명수 (서명 또는 인)

한국산업안전보건공단 경기서부지도원장

불법복제 및 배포금지

서 면 심 사 서 류

형식 번호 : KDC20/7.5-MA

심사필

KCS

한국산업안전보건공단

극 동 호 이 스 트 (주)

工場 : 경기도 안산시 단원구 성곡동 630-2 반월공단607-14

電話 : 031) 491 - 5311

FAX : 031) 494 - 5315

산업재해예방

안전보건공단

KOREA OCCUPATIONAL SAFETY & HEALTH AGENCY

192.168.11.76 / 2013-12-17 15:49:47

동 일 형 식 일 람 표

사업장명	극동호이스트㈜	개정일자 및 번호	2013년 12월 02일	인증번호	
형식 및 모델		동일 형식 인정범위 및 내역			비 고
형식	모델	권상속도(m/min)	횡행속도(m/min)	양정(m)	횡행방식
KDC20/7.5-MA	KDC20/7.5-L12-MA	[20T] 고속: 4.8 CREEP: 0.48 [7.5T] 고속: 3.8 CREEP: 0.38	고속: 15 저속: 10 듀얼고속: 15/7.5 듀얼저속: 10/5	12	모터구동식
	KDC20/7.5-L18-MA			18	
	KDC20/7.5-L24-MA			24	
	KDC20/7.5-L30-MA			30	
	-			-	

산업재해예방
안전보건공단
KOREA OCCUPATIONAL SAFETY & HEALTH AGENCY
192.168.11.76 / 2013-12-17 15:49:47
산업안전보건공단 검사소
무단복제 및 배포금지

불법복제 및 배포금지

제 2012-BJ-0009 호

안 전 인 증 서

정호엔지니어링

경기도 광명시 노동사동 440-5

위 사업장에서 제조하는 아래의 품목이 산업안전보건법 제34조 및 같은 법 시행규칙 제58조의4제4항에 따른 안전인증 심사 결과 안전·보건기준에 적합하므로 안전인증표시의 사용을 인증합니다.

품 목

양중기용 과부하방지장치

형식·모델/용량·등급/인증번호

형식·모델	용량·등급	인증번호
JDL-100	J-2	12-AV2BJ-0009

인 증 기 준

방호장치 의무안전인증 고시(고용노동부고시 제2010-36호)

인 증 조 건

아래 주소에서 생산되는 제품에 한함.

정호엔지니어링, 경기도 광명시 노동사동 440-5

2012년 06월 11일

한국산업안전보건공단 이사장

산업재해예방
안전보건공단
KOREA OCCUPATIONAL SAFETY & HEALTH AGENCY

1-안전인증서.jpg 123 KB PC저장 · 클라우드 저장 · 삭제

192.168.11.76 / 2013-12-17 15:49:47

불법복제 및 배포금지

2. 도 면

심사필
KCS
한국산업안전보건공단

산업재해예방
안전보건공단
KOREA OCCUPATIONAL SAFETY & HEALTH AGENCY

192.168.11.76 / 2013-12-17 15:49:47

불법복제 및 배포금지

1) 기　　계

심사필
KCS
한국산업안전보건공단

산업재해예방
안전보건공단
KOREA OCCUPATIONAL SAFETY & HEALTH AGENCY

192.168.11.76 / 2013-12-17 15:49:47

불법복제 및 배포금지

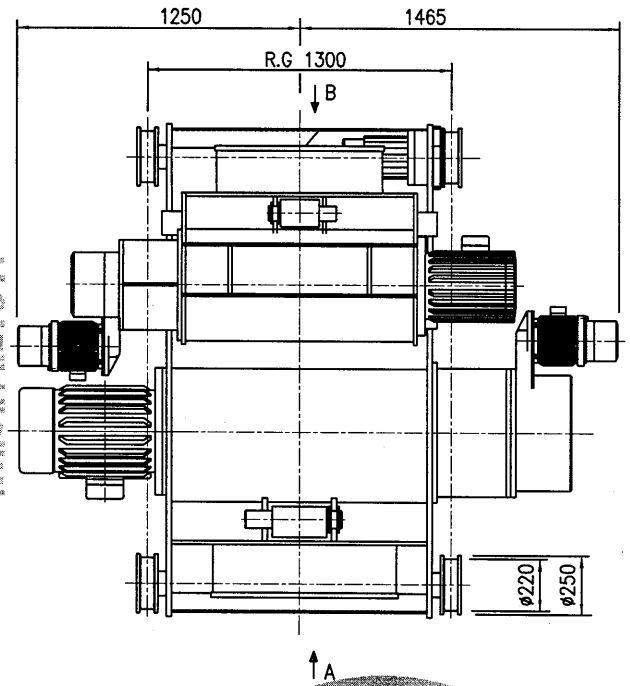

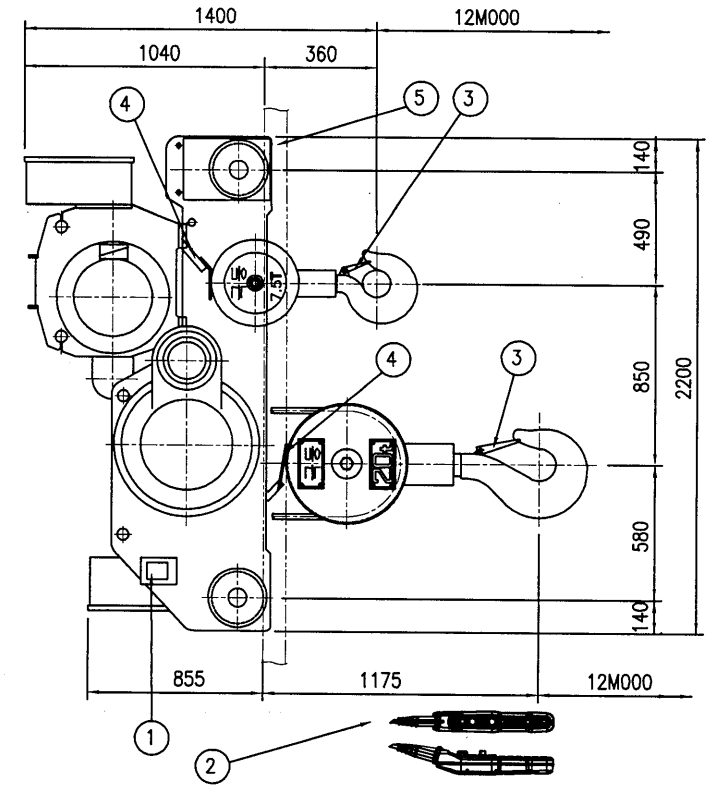

극동호이스트
20000KG
제한하중

VIEW A

극동호이스트
7500KG
제한하중

VIEW B

SPECIFICATION				
HOISTING LOAD			20000 KG	7500 KG
TEST LOAD			22500 KG	9375 KG
LIFT			12 M	
HOISTING	HIGH	SPEED	4.2/0.42 M/MIN	3.8/0.38 M/MIN
		MOTOR	17/1.8KW x 8P	5.5/1.0KW x 6P
TRAVERSING	HIGH	SPEED	15 M/MIN	
		MOTOR	1.5KW x 4P	
	LOW	SPEED	10 M/MIN	
		MOTOR	1.0KW x 6P	
	DUAL HIGH	SPEED	15/7.5 M/MIN	
		MOTOR	1.5/0.75KW x 4/8P	
	DUAL LOW	SPEED	10/5 M/MIN	
		MOTOR	1.0/0.5KW x 6/12P	
WIRE ROPE			(6x37) ø22.4x4FALLS	ø14x4FALLS
POWER SOURCE			AC#3 220V(380,440,460,480V) 60Hz	
TRAVERSING RAIL			22 KG/M	
GROSS WEIGHT			3750 KG	

NO.	DESCRIPTION	MT'L	SUB QT'Y	TOTAL QT'Y	SUB WEIGHT(Kg)	TOTAL WEIGHT(Kg)	REMARKS.
5	T/S RAIL	–		–			22KG/M
4	UPPER LIMIT S/W	SS400		2			
3	SAFETY LATCH	SS400		2			
2	EMERGENCY S/W	–		1			
1	LOAD LIMITER	–		2			

PROJECT		DATE	DIM
			mm
TITLE	KDC20/7.5-L12-MA ARIANGEMENT DRAWING FOR HOIST	SCALE	PROJECTION
		A3/20	3rd

DRAWN	DESIGNED	CHECKED	APPROVED	REF. DRAWING

극동호이스트 주식회사
KUK DONG HOIST CO., LTD.

SHEET No. | DWG No.

한국산업안전보건공단
KOREA OCCUPATIONAL SAFETY & HEALTH AGENCY
192.168.11.76 / 2013-12-17 15:49:47

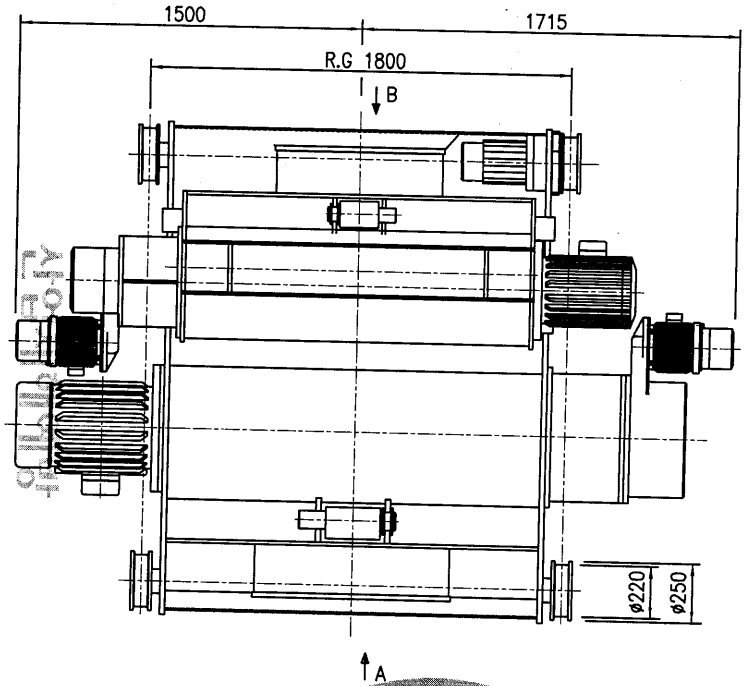

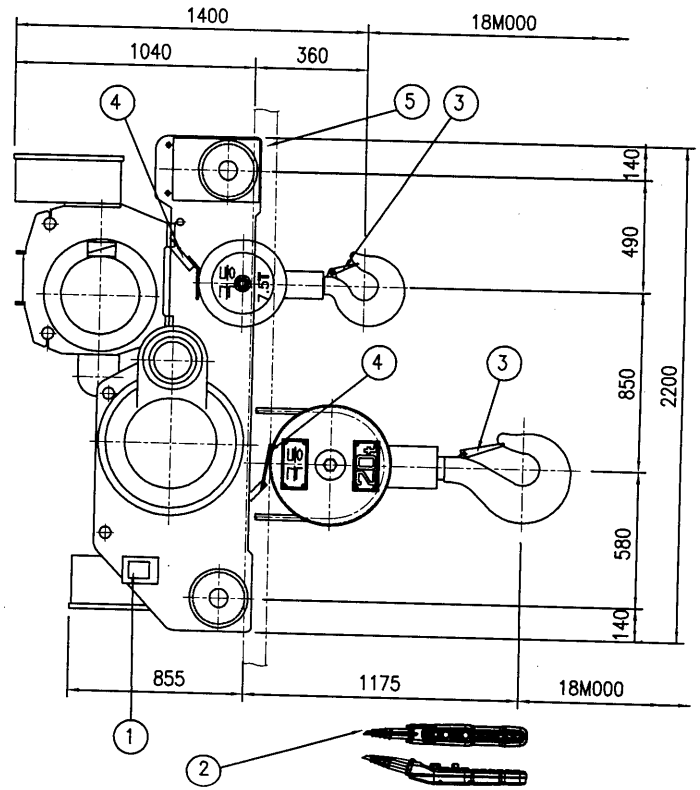

극동호이스트
20000KG
제한하중

VIEW A

극동호이스트
7500KG
제한하중

VIEW B

SPECIFICATION				
HOISTING LOAD			20000 KG	7500 KG
TEST LOAD			22500 KG	9375 KG
LIFT			18 M	
HOISTING	HIGH	SPEED	4.2/0.42 M/MIN	3.8/0.38 M/MIN
		MOTOR	17/1.8KW x 8P	5.5/1.0KW x 6P
TRAVERSING	HIGH	SPEED	15 M/MIN	
		MOTOR	1.5KW x 4P	
	LOW	SPEED	10 M/MIN	
		MOTOR	1.0KW x 6P	
	DUAL HIGH	SPEED	15/7.5 M/MIN	
		MOTOR	1.5/0.75KW x 4/8P	
	DUAL LOW	SPEED	10/5 M/MIN	
		MOTOR	1.0/0.5KW x 6/12P	
WIRE ROPE			(6x37) ø22.4x4FALLS	ø14x4FALLS
POWER SOURCE			AC3ø 220V(380,440,460,480V) 60Hz	
TRAVERSING RAIL			22 KG/M	
GROSS WEIGHT			3950 KG	

NO.	DESCRIPTION	MT'L	SUB	TOTAL	SUB	TOTAL	REMARKS.
			QT'Y		WEIGHT(Kg)		
5	T/S RAIL	–		–			22KG/M
4	UPPER LIMIT S/W	SS400		2			
3	SAFETY LATCH	SS400		2			
2	EMERGENCY S/W	–		1			
1	LOAD LIMITER	–		2			

PROJECT		DATE	DIM
			mm
TITLE	KDC20/7.5-L18-MA ARIANGEMENT DRAWING FOR HOIST	SCALE	PROJECTION
		A3/20	3rd
DRAWN	DESIGNED / CHECKED / APPROVED	REF. DRAWING	

극동호이스트 주식회사
KUK DONG HOIST CO., LTD.

SHEET No. | DWG No.

KOREA OCCUPATIONAL SAFETY & HEALTH AGENCY
한국산업안전보건공단
192.168.11.76 / 2013-12-17 15:49:47
KCS 한국산업안전보건공단
열람용 도면 배포금지

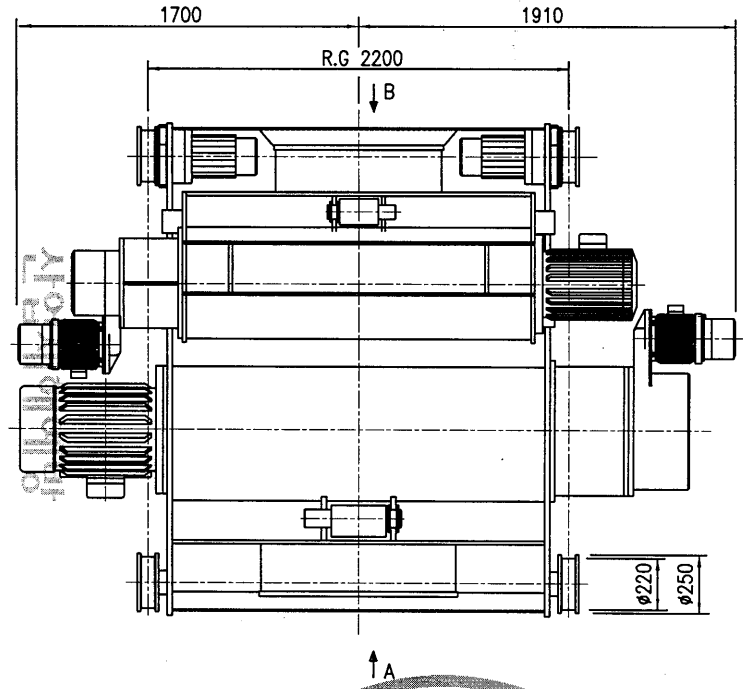

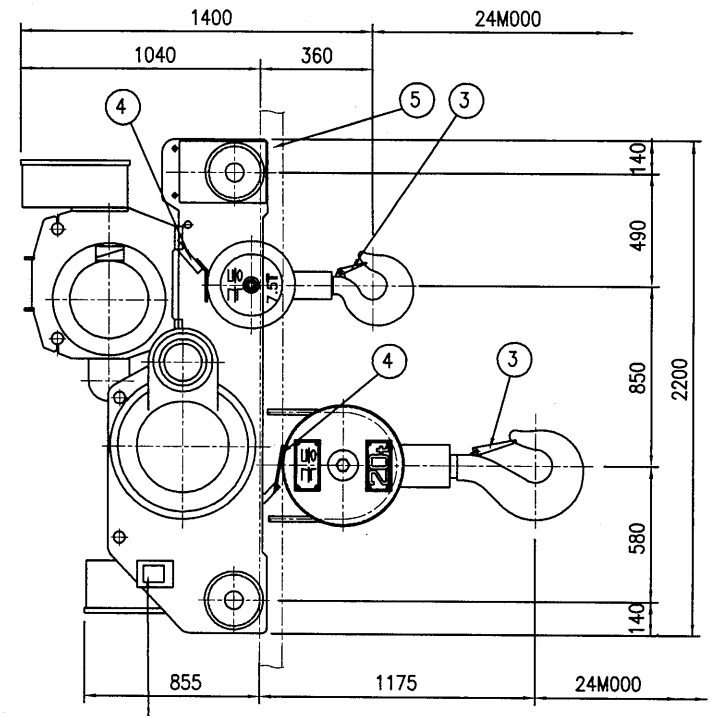

극동호이스트
20000KG
제한하중

VIEW A

극동호이스트
7500KG
제한하중

VIEW B

SPECIFICATION				
HOISTING LOAD			20000 KG	7500 KG
TEST LOAD			22500 KG	9375 KG
LIFT			24 M	
HOISTING	HIGH	SPEED	4.2/0.42 M/MIN	3.8/0.38 M/MIN
		MOTOR	17/1.8KW x 8P	5.5/1.0KW x 6P
TRAVERSING	HIGH	SPEED	15 M/MIN	
		MOTOR	1.5KW x 4P (2UNITS)	
	LOW	SPEED	10 M/MIN	
		MOTOR	1.0KW x 6P (2UNITS)	
	DUAL HIGH	SPEED	15/7.5 M/MIN	
		MOTOR	1.5/0.75KW x 4/8P (2UNITS)	
	DUAL LOW	SPEED	10/5 M/MIN	
		MOTOR	1.0/0.5KW x 6/12P (2UNITS)	
WIRE ROPE			(6x37) ø22.4x4FALLS	ø14x4FALLS
POWER SOURCE			AC3ø 220V(380,440,460,480V) 60Hz	
TRAVERSING RAIL			22 KG/M	
GROSS WEIGHT			4150 KG	

NO.	DESCRIPTION	MT'L	SUB	TOTAL	SUB	TOTAL	REMARKS.
			QT'Y		WEIGHT(Kg)		
5	T/S RAIL	–		–			22KG/M
4	UPPER LIMIT S/W	SS400		2			
3	SAFETY LATCH	SS400		2			
2	EMERGENCY S/W	–		1			
1	LOAD LIMITER	–		2			

PROJECT		DATE	DIM
			mm
TITLE	KDC20/7.5-L24-MA ARIANGEMENT DRAWING FOR HOIST	SCALE	PROJECTION
		A3/20	3rd

DRAWN	DESIGNED	CHECKED	APPROVED	REF. DRAWING

극동호이스트 주식회사
KUK DONG HOIST CO., LTD.

SHEET No.

DWG No.

KOREA OCCUPATIONAL SAFETY & HEALTH AGENCY
192.168.11.76 / 2013-12-17 15:49:47
불법복제 및 배포금지

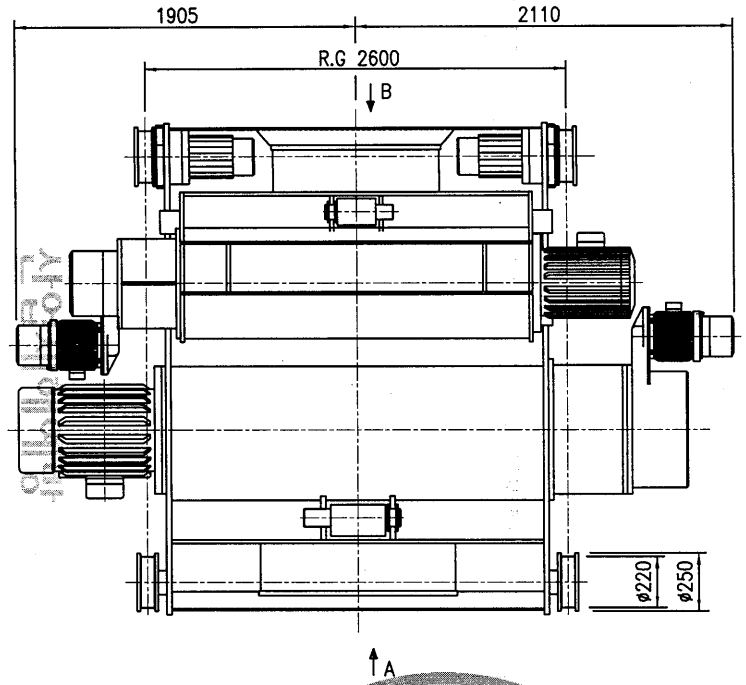

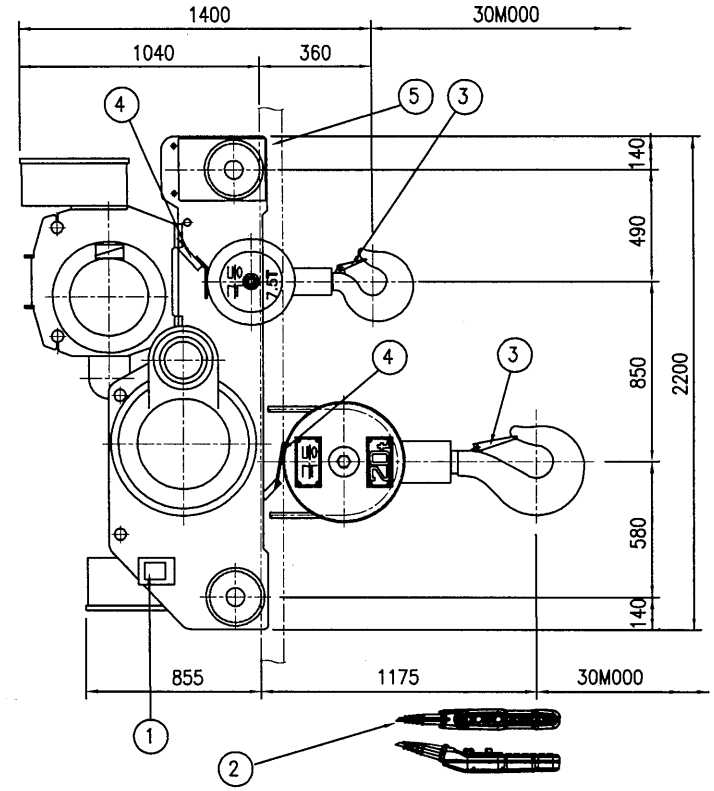

극동호이스트
20000KG
제한하중

VIEW A

극동호이스트
7500KG
제한하중

VIEW B

SPECIFICATION				
HOISTING LOAD			20000 KG	7500 KG
TEST LOAD			22500 KG	9375 KG
LIFT			30 M	
HOISTING	HIGH	SPEED	4.2/0.42 M/MIN	3.8/0.38 M/MIN
		MOTOR	17/1.8KW x 8P	5.5/1.0KW x 6P
TRAVERSING	HIGH	SPEED	15 M/MIN	
		MOTOR	1.5KW x 4P (2UNITS)	
	LOW	SPEED	10 M/MIN	
		MOTOR	1.0KW x 6P (2UNITS)	
	DUAL HIGH	SPEED	15/7.5 M/MIN	
		MOTOR	1.5/0.75KW x 4/8P (2UNITS)	
	DUAL LOW	SPEED	10/5 M/MIN	
		MOTOR	1.0/0.5KW x 6/12P (2UNITS)	
WIRE ROPE			(6x37) ø22.4x4FALLS	ø14x4FALLS
POWER SOURCE			AC#3 220V(380,440,460,480V) 60Hz	
TRAVERSING RAIL			22 KG/M	
GROSS WEIGHT			4400 KG	

NO.	DESCRIPTION	MT'L	SUB QT'Y	TOTAL QT'Y	SUB WEIGHT(Kg)	TOTAL WEIGHT(Kg)	REMARKS.
5	T/S RAIL	–		–			22KG/M
4	UPPER LIMIT S/W	SS400		2			
3	SAFETY LATCH	SS400		2			
2	EMERGENCY S/W	–		1			
1	LOAD LIMITER	–		2			

PROJECT		DATE	DIM
			mm
TITLE	KDC20/7.5-L30-MA	SCALE	PROJECTION
	ARIANGEMENT DRAWING FOR HOIST	A3/20	3rd

DRAWN	DESIGNED	CHECKED	APPROVED	REF. DRAWING

극동호이스트 주식회사
KUK DONG HOIST CO., LTD.

SHEET No. | DWG No.

무단복제 및 배포금지
아시아건설기술원
KOREA OCCUPATIONAL SAFETY & HEALTH AGENCY
192.168.11.76 / 2013-12-17 15:49:47

불법복제 및 배포금지

2) 전　　기

심사필
KCS
한국산업안전보건공단

산업재해예방
안전보건공단
KOREA OCCUPATIONAL SAFETY & HEALTH AGENCY

192.168.11.76 / 2013-12-17 15:49:47

KDSM0001

ADR'S NO.

ELECTRICAL SYMBOL LIST

DESCRIPTION	SYMBOLS
3 PHASE SQUIRREL CAGE ROTOR INDUCTION MOTOR	IM
3 PHASE WOUND ROTOR INDUCTION MOTOR	
DC. MAG. BRAKE DISK TYPE	
THRUSTOR BRAKE	B-TH
AC-DC MAG. BRAKE	B-MD
SC BRAKE	B-SC
EC BRAKE	B-EC
RECTIFIER	
LOAD LIMITER ELECTRICAL TYPE	
ELECTRONIC OVER CURRENT RELAY	

DESCRIPTION	SYMBOLS
NO FUSE BREAKER 2 PHASE	
NO FUSE BREAKER 3 PHASE	
EARTH LEAKAGE BREAKER 2 PHASE	
EARTH LEAKAGE BREAKER 3 PHASE	
TRANSFORMER	
CURRENT TRANSFORMER	
POTENTIAL TRANSFORMER	
FUSE	
FUSE WITH CONTACTOR	
THYRISTOR UNIT	

DESCRIPTION	SYMBOLS	
	MAKE	BREAK
MAGNETIC & RELAY CONTACTOR		
ON DELAY TIME CONTACTOR		
OFF DELAY TIME CONTACTOR		
EOCR OR THERMAL RELAY CONTACTOR		
THERMOSTAT		
LIMIT SWITCH		
PUSHBUTTON SWITCH		
EMERGENCY PUSHBUTTON SWITCH		
KEY SWITCH		
FOOT SWITCH		

DESCRIPTION	SYMBOLS	
	MAKE	BREAK
PUSHBUTTON SWITCH 1BUTTON 2STEP TYPE		
TOGGLE SWITCH OR SELLECTOR SWITCH		

MK	DATE	REVISIONS	CHK.	APP.
4				
3				
2				
1				

CUSTOMER		DRAWING	DESIGN	CHECKED	APPROVED	SCALE	DATE	ORDER NO.
DRAWING TITLE	SYMBOL LIST 1/2					NONE		
		KUK DONG HOIST CO., LTD.				DWG. NO	KDSM0001	

192.168.11.76 / 2013-12-17 15:49:47
KOREA OCCUPATIONAL SAFETY & HEALTH AGENCY
산업안전보건공단

KDSM0002

ADR'S NO.

ELECTRICAL SYMBOL LIST

DESCRIPTION	SYMBOLS
WIRE INTERNAL TO ENCLOSURE	
WIRE EXTERNAL TO ENCLOSURE	
WIRE NOT CONNECTED	
WIRE CONNECTED	
TERMINAL	
GROUND (EARTH)	
PLUG & RECEPTACLE	
MAGNETIC CONTACTOR COIL	M
AUX. RELAY COIL	CR
TIMER COIL	T

DESCRIPTION	SYMBOLS
CONTROLLER OR REMOTE CONTROLLER CONTACTOR	
UPPER LIMIT SWITCH (LS-II)	
THERMAL RELAY	
PILOT(SIGNAL) LAMP	
ROTARY LAMP	
WARING SIREN	
BUZZER	
AMMETER	A AC / A DC
VOLT METER	V AC / V DC
FLUORENCE LAMP	

DESCRIPTION	SYMBOLS
SOLENOID COIL	
RESISTER	
VARIABLE RESISTOR	
SLIP RING	
CABLE REEL	
SPACE HEATER	
SURGE ABSORBER	
LOAD CELL	
BALLAST WITH RECEPTACLE	
FAN	

DESCRIPTION	SYMBOLS
FLOOD LIGHTING	
RECEPTACLE	

MK	DATE	REVISIONS	CHK.	APP.
4				
3				
2				
1				

CUSTOMER

DRAWING TITLE: SYMBOL LIST 2/2

DRAWING	DESIGN	CHECKED	APPROVED	SCALE	DATE	ORDER NO.
				NONE		

국동호이스트 주식회사
KUK DONG HOIST CO., LTD.

DWG. NO KDSM0002

KOREA OCCUPATIONAL SAFETY & HEALTH AGENCY
192.168.11.76 / 2013-12-17 15:49:47

ELECTRICAL SPECIFICATION

. POWER SOURCE : AC 3Φ 220V, 380V, 440V ,460V,480V 60Hz

. CONTROL SOURCE : AC 1Φ 48V, 110V, 120V 60Hz

OBJECT		MOTOR OUTPUT	220V		380V		440V	460V	480V	440,460,480V	BRAKE	REMARK
			STATOR CURRENT	1st CABLE SIZE	STATOR CURRENT	1st CABLE SIZE	STATOR CURRENT	STATOR CURRENT	STATOR CURRENT	1st CABLE SIZE		
MAIN HOIST	MAIN	17KW x 8P 30 MIN	76.60 A	35 sq	44.30 A	16 sq	38.3 A	36.6 A	35.2 A	16 sq	DC MAG. BRAKE	
	CREEP	1.8KW x 8P 30 MIN	11.00 A	4 sq	6.40 A	4 sq	5.5 A	5.3 A	5.1 A	4 sq	DC MAG. BRAKE	
AUX HOIST	MAIN	5.5KW x 6P 30 MIN	28.20 A	10 sq	16.30 A	6 sq	14.1 A	13.5 A	12.9 A	6 sq	DC MAG. BRAKE	
	CREEP	1.0KW x 6P 30 MIN	6.70 A	4 sq	3.90 A	4 sq	3.3 A	3.2 A	3.1 A	4 sq	DC MAG. BRAKE	
TRAVERSING	HIGH	1.5KW x 4P 30 MIN	7.80 A	4 sq	4.20 A	4 sq	3.70 A	3.50 A	3.40 A	4 sq	DC MAG. BRAKE	1 DRIVE
	LOW	1.0KW x 6P 30 MIN	6.80 A	4 sq	3.90 A	4 sq	3.30 A	3.20 A	3.10 A	4 sq	DC MAG. BRAKE	1 DRIVE
CONTROL CIRCUIT			2 A	2.5 sq	2 A	2.5 sq	2 A	2 A	2 A	2.5 sq		
LIGHTING & ACC'Y CIRCUIT												
SUB TOTAL (NORMAL LOAD)		HIGH	86.40 A	50 sq	50.50 A	25 sq	44.00 A	42.10 A	40.60 A	25 sq	I(A)=M/H + T/S + ASS'Y	
SUB TOTAL		LOW	85.40 A	50 sq	50.20 A	25 sq	43.60 A	41.80 A	40.30 A	25 sq	I(A)=M/H + T/S + ASS'Y	

*. 위 계산은 HIGH(MAX.)일때와 LOW(MIN.)일때만 계산한것임.

*. 위 계산은 LIFT 12.18M에 적용.

192.168.11.76 / 2013-12-17 15:49:47

불법복제 및 배포금지

ELECTRICAL SPECIFICATION

. POWER SOURCE : AC 3Φ 220V, 380V, 440V ,460V,480V 60Hz

. CONTROL SOURCE : AC 1Φ 48V, 110V, 120V 60Hz

OBJECT		MOTOR OUTPUT	220V		380V		440V	460V	480V	440,460,480V	BRAKE	REMARK
			STATOR CURRENT	1st CABLE SIZE	STATOR CURRENT	1st CABLE SIZE	STATOR CURRENT	STATOR CURRENT	STATOR CURRENT	1st CABLE SIZE		
MAIN HOIST	MAIN	17KW x 8P 30 MIN	76.60 A	35 sq	44.30 A	16 sq	38.3 A	36.6 A	35.2 A	16 sq	DC MAG. BRAKE	
	CREEP	1.8KW x 8P 30 MIN	11.00 A	4 sq	6.40 A	4 sq	5.5 A	5.3 A	5.1 A	4 sq	DC MAG. BRAKE	
AUX HOIST	MAIN	5.5KW x 6P 30 MIN	28.20 A	10 sq	16.30 A	6 sq	14.1 A	13.5 A	12.9 A	6 sq	DC MAG. BRAKE	
	CREEP	1.0KW x 6P 30 MIN	6.70 A	4 sq	3.90 A	4 sq	3.3 A	3.2 A	3.1 A	4 sq	DC MAG. BRAKE	
TRAVERSING	HIGH	1.5KW x 4P 30 MIN	7.80 A	4 sq	4.20 A	4 sq	3.70 A	3.50 A	3.40 A	4 sq	DC MAG. BRAKE	2 DRIVE
	LOW	1.0KW x 6P 30 MIN	6.80 A	4 sq	3.90 A	4 sq	3.30 A	3.20 A	3.10 A	4 sq	DC MAG. BRAKE	2 DRIVE
CONTROL CIRCUIT			2 A	2.5 sq	2 A	2.5 sq	2 A	2 A	2 A	2.5 sq		
LIGHTING & ACC'Y CIRCUIT												
SUB TOTAL (NORMAL LOAD)		HIGH	94.20 A	50 sq	54.70 A	25 sq	47.70 A	45.60 A	44.00 A	25 sq	I(A)=M/H + T/S + ASS'Y	
SUB TOTAL		LOW	92.20 A	50 sq	54.10 A	25 sq	46.90 A	45.00 A	43.40 A	25 sq	I(A)=M/H + T/S + ASS'Y	

*. 위 계산은 HIGH(MAX.)일때와 LOW(MIN.)일때만 계산한것임.

*. 위 계산은 LIFT 24.30M에 적용.

불법복제 및 배포금지

192.168.11.76 / 2013-12-17 15:49:47

불법복제 및 배포금지

▣ 보호본딩회로의 연속성 확인

시험전선의 최소유효 단면적(㎟)	최고 전압 강하(V)
1.0	3.3
1.5	2.6
2.5	1.9
4.0	1.4
>6.0	1.0

①보호본딩회로의 연속성의 검증은 PELV전원(50/60Hz)에서 최소 10A 이상의 전류를 10초 이상의 인가에 의한다. 시험은 PE단자와 보호본딩회로의 여러지점 사이에서 이루어진다.

②PE단자와 시험 지점 사이에서 측정된 전압은(표 참조) 값을 초과 해서는 아니된다.

▣ 절연저항 시험

전원선과 보호본딩선 사이를 직류 500V로 측정한 절연저항 값은 1MΩ 이상이어야 한다.

▣ 내전압 시험

①PELV 전압에서 작동되도록 설계된 전기장치의 회로를 제외한 모든 회로와 보호본딩회로의 전선 사이에 1초 이상 지속되는 다음의 시험 전압에 견딜수 있어야 한다.

- 장치의 정격전압의 두배 또는 1,000V 중 큰값의 전압

②이 시험을 견딜수 없도록 설계된 부품은 시험이 진행되기 전에 차단하여야 한다.

산업안전보건연구원 KOREA OCCUPATIONAL SAFETY & HEALTH AGENCY
192.168.11.76 / 2013-12-17 15:49:47

192.168.11.76 / 2013-12-17 15:49:47
KOREA OCCUPATIONAL SAFETY & HEALTH AGENCY
산업재해예방 산업안전보건공단
불법복제 및 배포금지

* MAIN POWER : AC 3PH 220V(380,440,460,480)V 60Hz (12,18M)

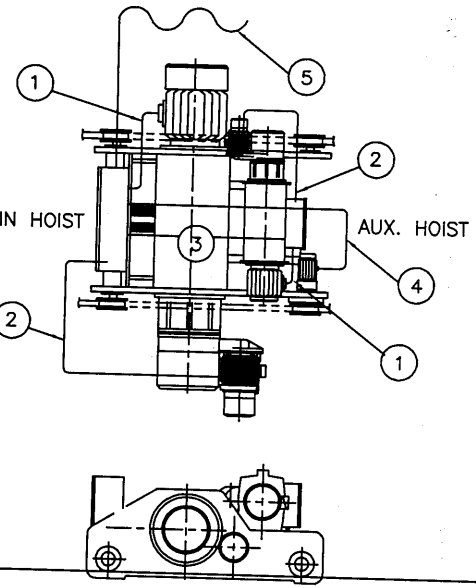

* MAIN POWER : AC 3PH 220V(380,440,460,480)V 60Hz (24,30M)

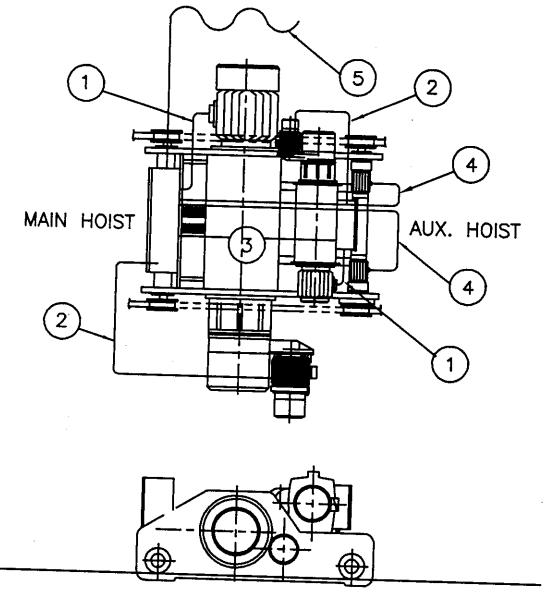

본 도면은 EARTH를 명기하기 위한 도면으로서
실제 배치와 다를 수 있으며 HOIST 본체와의
EARTH용 CABLE은 REFERENCE임

*3종 접지공사 100Ω 이하 (AC 3PH 400V 미만)
*특3 종 접지공사 10Ω 이하 (AC 3PH 400V 이상)

NO	TYPE	CABLE SIZE			TYPE	SIZE	REMARK
			220V	380V		440V,460V,480V	
1	VCT	MAIN	35sqx4c	16sqx5c	VCT	16sqx5c	M/H MOTOR WITH EARTH
		AUX	10sqx4c	6sqx5c		6.0sqx5c	A/H MOTOR WITH EARTH
2	VCT	MAIN	4.0sqx4c	4.0sqx5c	VCT	4.0sqx5c	M/H CREEP MOTOR WITH EARTH
		AUX	4.0sqx4c	4.0sqx5c		4.0sqx5c	A/H CREEP MOTOR WITH EARTH
3	VCT	10sqx4c		6sqx4c	VCT	6.0sqx4c	A/H POWER WITH EARTH
4	VCT	4.0sqx4c+2.5sqx3c			VCT	4.0sqx4c+2.5sqx3c	T/S MOTOR WITH EARTH
5	VCT	HIGH	50sqx4c	25sqx4c	VCT	25sqx4c	MAIN POWER WITH EARTH
		LOW	50sqx4c	25sqx4c		25sqx4c	

동전위접지

1.전기장비와 기계의 노출된 모든 도전부는 보호본딩회로에 연결되어야 하며 적절한 접지연속성 기능이 유지되야함.

2. 보호본딩회로에는 개폐기, 과전류보호장치가 부착되지 않아야 한다.

시험대상 전선의 최소 유효단면적	최고전압강하(V)
1.0	3.3
1.5	2.6
2.5	1.6
4.0	1.4
>6.0	1.0

MK	DATE	REVISIONS	CHK.	APP.
4				
3				
2				
1				

CUSTOMER

DRAWING TITLE: KDC 20/7.5TON
CABLE 사양 및 접지

DRAWING	DESIGN	CHECKED	APPROVED	SCALE	DATE	ORDER NO.
				NONE		

극동호이스트 주식회사
KUK DONG HOIST CO., LTD.

DWG. NO

불법복제 및 배포금지

* MAIN POWER : AC 3PH 220V(380,440,460,480)V 60Hz (12,18,24,30M)

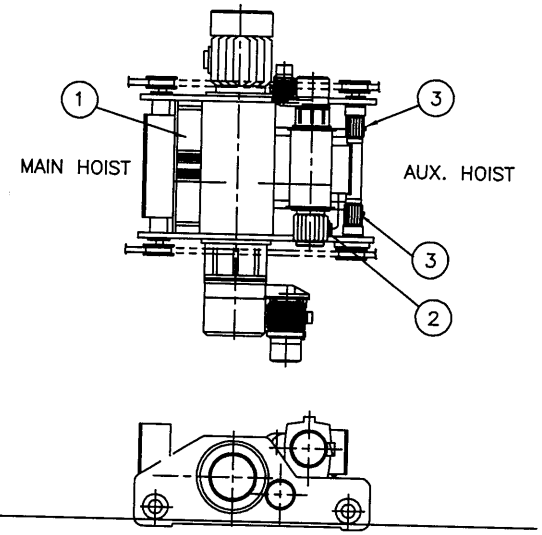

1

KD ELECTRIC WIRE ROPE HOIST			
MODEL		RATING	min
CAPACITY	Kg	LIFT	m
HOIST SPEED	m/min	POWER SOURCE	V Hz
HOIST MOTOR	Kw P	AMP.S R&T HOIST	A
TRAV.SPEED	m/min	AMP.S R&T TRAV.	A
TRAV.MOTOR	Kw P	WIRE ROPE	Ø
WIDTH OF RAIL	mm	WEIGET	Kg
DATE		SERIAL	

KUKDONG HOIST CO.,LTD

2

KD 3 PHASE INDUCTION MOTOR			
KW	P	TYPE	TENV
VOLTS	V	RATING	min
AMP.S	A	AMP.TEMP	40℃
HEARTS		INS.CLASS	F
R.P.M		BEARING	
ROTOR	C	BEARING	
SERIAL.		DATE	

KUKDONG HOIST CO.,LTD

3

KD 3 PHASE INDUCTION MOTOR			
KW	P	TYPE	TENV
VOLTS	V	RATING	min
AMP.S	A	AMP.TEMP	40℃
HEARTS		INS.CLASS	F
R.P.M		BEARING	
ROTOR	C	BEARING	
SERIAL.		DATE	

KUKDONG HOIST CO.,LTD

MK	DATE	REVISIONS	CHK.	APP.
4				
3				
2				
1				

CUSTOMER		DRAWING	DESIGN	CHECKED	APPROVED	SCALE	DATE	ORDER NO.
DRAWING TITLE	KDC 20/7.5TON WIRE HOIST NAMEPLATE					NONE		
		KD 극동호이스트 주식회사 KUK DONG HOIST CO., LTD.				DWG. NO		

KOREA OCCUPATIONAL SAFETY & HEALTH AGENCY
산업재해예방
안전보건공단
192.168.11.76 / 2013-12-17 15:49:47

출처 및 문의 : 산업안전보건공단 배포금지

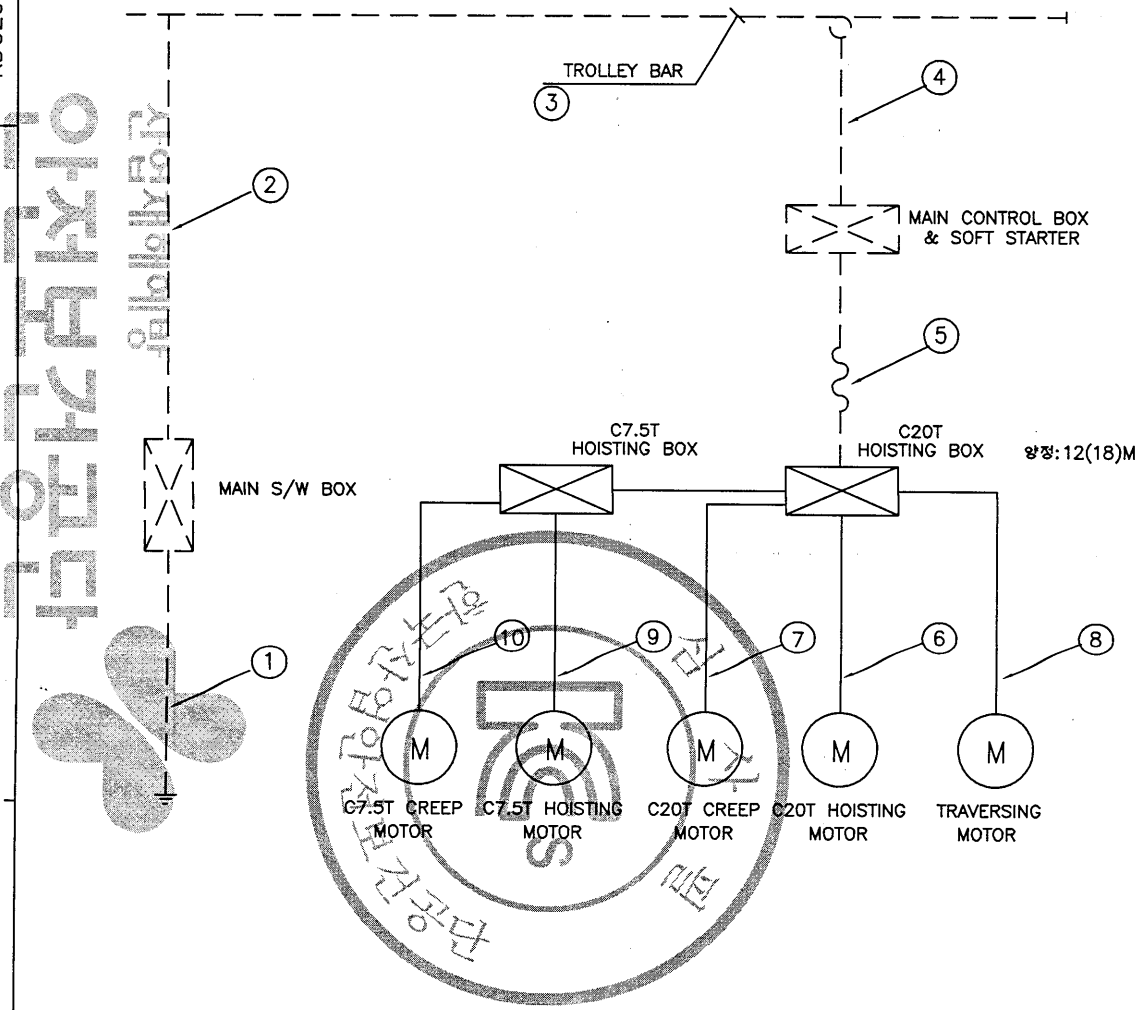

NO	DESCRIPTION	CABLE SIZE
1	MAIN EARTH LINE	USER SCOPE
2	POWER SOURCE	USER SCOPE
3	TROLLEY BAR	USER SCOPE
4	POWER SOURCE WITH EARTH	USER SCOPE
5	HOIST POWER SOURCE WITH EARTH	VCT 50SQ x 1C (FOR 220V)
6	20T HOISTING MOTOR WITH EARTH	VCT 35SQ x 1C (FOR 220V)
7	20T CREEP MOTOR WITH EARTH	VCT 4.0SQ x 1C
8	TRAVERSING MOTOR WITH EARTH	VCT 4.0SQ x 1C
9	7.5T HOISTING MOTOR WITH EARTH	VCT 10(6)SQ x 1C
10	7.5T CREEP MOTOR WITH EARTH	VCT 4.0SQ x 1C

** CV CABLE 4C중 1C는 EARTH로 사용함.*

– NOTE –

1. 전동기 외함, 제어반의 프레임 등은 접지하여 그 접지 저항은

400V 미만 : 100오옴 이하일것.(3종 접지)
400V 이상 : 10오옴 이하일것.(특 3종접지)

2.MAIN S/W BOX는 3종 접지 요.

— — — — USER SCOPE
———— KUKDONG SCOPE

등전위접지

1.전기장비와 기계의 노출된 모든 도전부는 보호본딩회로에 연결되어야 하며 적절한 접지연속성 기능이 유지되야함.

2. 보호본딩회로에는 개폐기, 과전류보호장치가 부착되지 않아야 한다.

시험대상 전선의 최소 유효단면적	최고전압강하(V)
1.0	3.3
1.5	2.6
2.5	1.6
4.0	1.4
>6.0	1.0

MK	DATE	REVISIONS	CHK.	APP.
4				
3				
2				
1				

CUSTOMER		DRAWING	DESIGN	CHECKED	APPROVED	SCALE	DATE	ORDER NO.
DRAWING TITLE	EARTH DETAILS DRAWING					NONE		
						DWG. NO	KDC2075-EC001	

KDC2075-EC001

한국산업안전보건공단
KOREA OCCUPATIONAL SAFETY & HEALTH AGENCY
192.168.11.76 / 2013-12-17 15:49:47

KDC2075-EC002

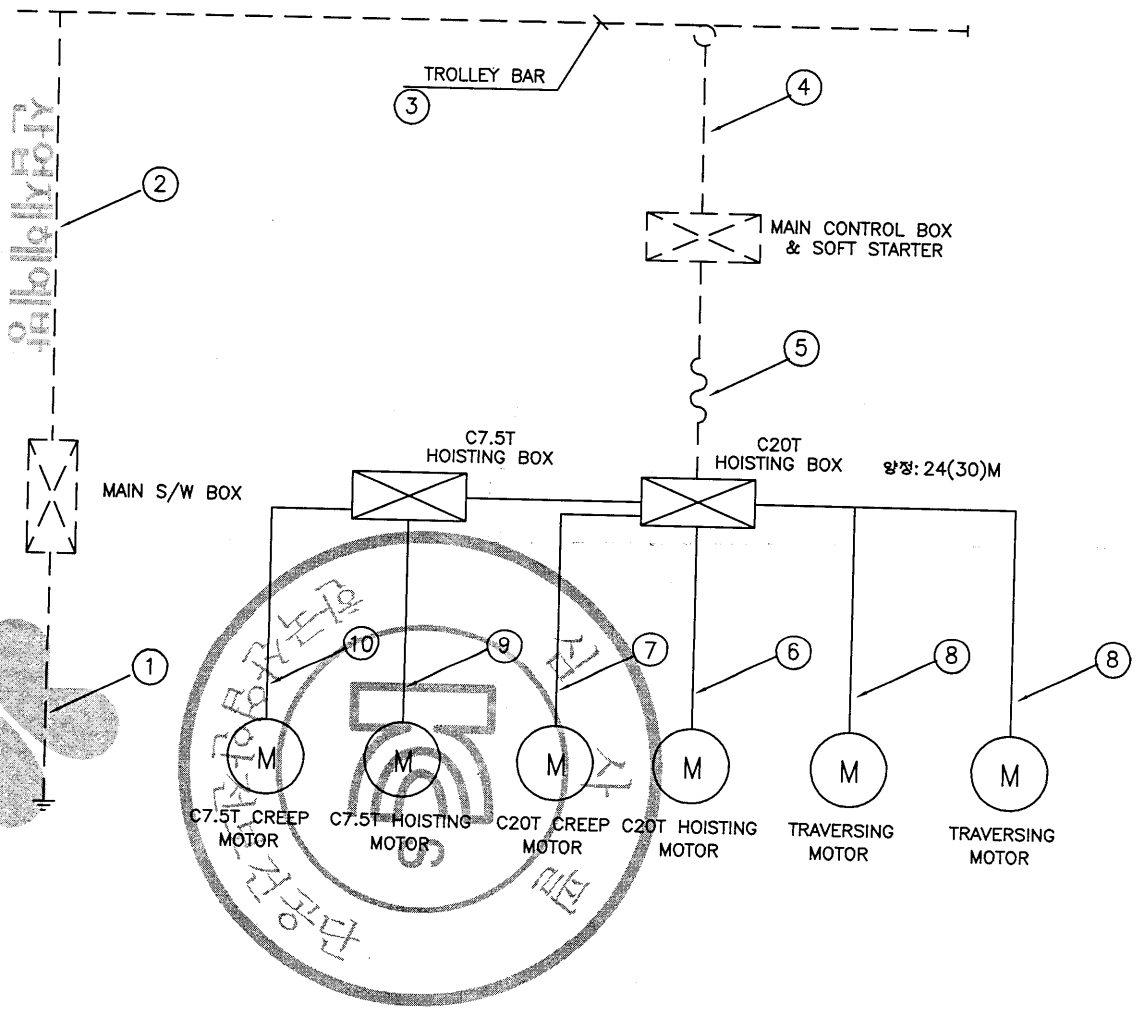

NO	DESCRIPTION	CABLE SIZE
1	MAIN EARTH LINE	USER SCOPE
2	POWER SOURCE	USER SCOPE
3	TROLLEY BAR	USER SCOPE
4	POWER SOURCE WITH EARTH	USER SCOPE
5	HOIST POWER SOURCE WITH EARTH	VCT 50SQ x 1C (FOR 220V)
6	20T HOISTING MOTOR WITH EARTH	VCT 35SQ x 1C (FOR 220V)
7	20T CREEP MOTOR WITH EARTH	VCT 4.0SQ x 1C
8	TRAVERSING MOTOR WITH EARTH	VCT 4.0SQ x 1C
9	7.5T HOISTING MOTOR WITH EARTH	VCT 10(6)SQ x 1C
10	7.5T CREEP MOTOR WITH EARTH	VCT 4.0SQ x 1C

* CV CABLE 4C중 1C는 EARTH로 사용함.

- NOTE -

1. 전동기 외함, 제어반의 프레임 등은 접지하여 그 접지 저항은

400V 미만 : 100오옴 이하일것.(3종 접지)
400V 이상 : 10오옴 이하일것.(특 3종접지)

2.MAIN S/W BOX는 3종 접지 요.

USER SCOPE
KUKDONG SCOPE

등전위접지

1.전기장비와 기계의 노출된 모든 도전부는 보호본딩회로에 연결되어야 하며 적절한 접지연속성 기능이 유지되야함.

2. 보호본딩회로에는 개폐기, 과전류보호장치가 부착되지 않아야 한다.

시험대상 전선의 최소 유효단면적	최고전압강하(V)
1.0	3.3
1.5	2.6
2.5	1.6
4.0	1.4
>6.0	1.0

MK	DATE	REVISIONS	CHK.	APP.
4				
3				
2				
1				

CUSTOMER		DRAWING	DESIGN	CHECKED	APPROVED	SCALE	DATE	ORDER NO.
DRAWING TITLE	EARTH DETAILS DRAWING					NONE		
						DWG. NO	KDC2075-EC002	

산업재해예방 아저버거관단
KOREA OCCUPATIONAL SAFETY & HEALTH AGENCY
192.168.11.76 / 2013-12-17 15:49:47
불법복제 및 배포금지

1	2	3	4	5	6	7	8	9	10	11	12	13	14	15	16	17	18	19	20
POWER CIRCUIT										CONTROL									ADR'S NO.
COMMON PROTECTION										ON-OFF									A1

KDC2075E001

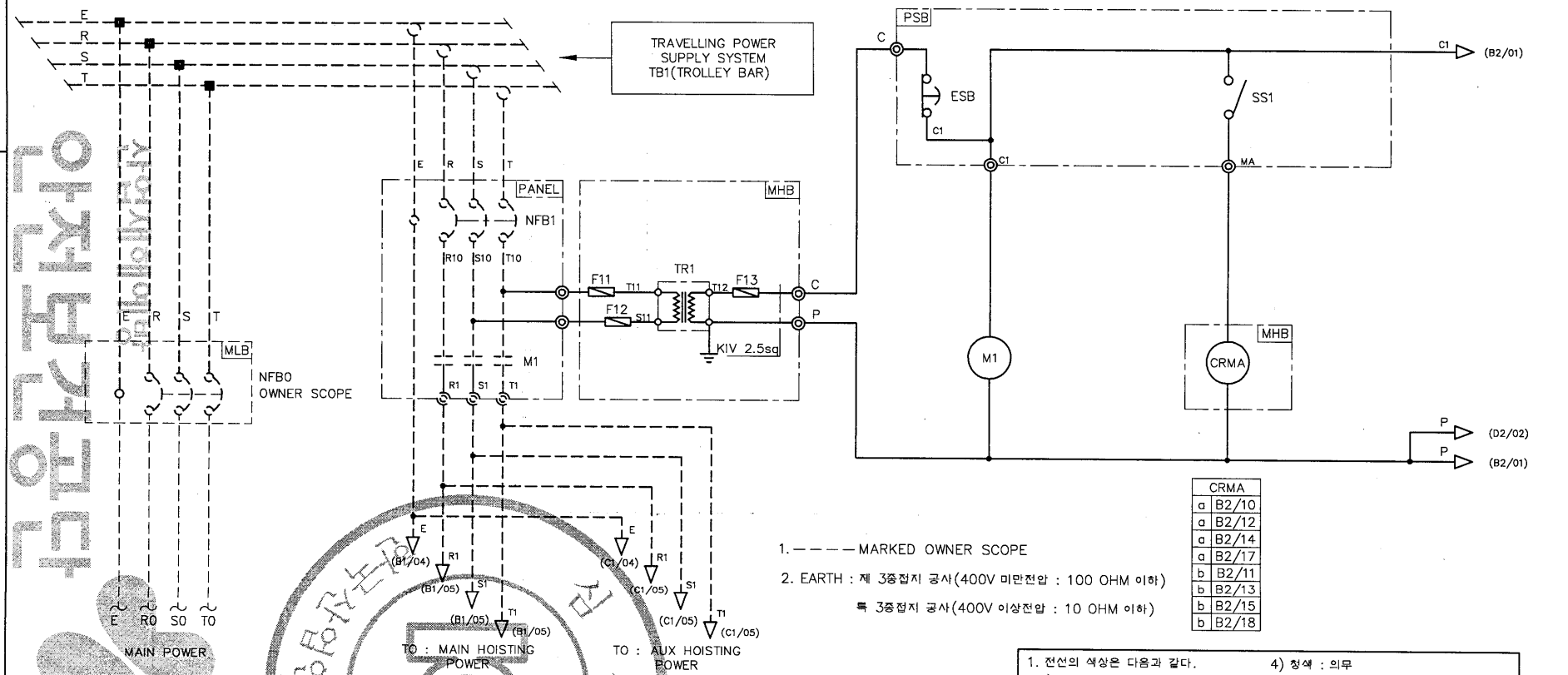

POWER SOURCE
AC 3ø 60Hz

SELECTION	VOLTAGE	F11 F12	F13	NFB1	M1	TR10
	220V	3A	5A	250AF/125AT	MC-100	220/110,120V 200VA
	380V	2A	5A	125AF/75AT	MC-65	380/110,120V 200VA
	440V	2A	5A	125AF/60AT	MC-65	440/110,120V 200VA
	460V	2A	5A	125AF/60AT	MC-65	460/110,120V 200VA
	480V	2A	5A	125AF/60AT	MC-65	480/110,120V 200VA

CRMA	
a	B2/10
a	B2/12
a	B2/14
a	B2/17
b	B2/11
b	B2/13
b	B2/15
b	B2/18

1. - - - - MARKED OWNER SCOPE
2. EARTH : 제 3종접지 공사(400V 미만전압 : 100 OHM 이하)
특 3종접지 공사(400V 이상전압 : 10 OHM 이하)

1. 전선의 색상은 다음과 같다.
   1) 흑 색 : 고류 및 직류 전원회로
   2) 적 색 : 고류제어회로
   3) 청 색 : 직류제어회로
   4) 주황색: 외부 연동장치 제어 회로
   5) 녹색 또는 녹색과 황색 조합 : 접지
   6) 청색 : 중성선
2. 표시등의 색상은 다음과 같다.
   1) 적 색 : 비상
   2) 황 색 : 비정상
   3) 녹 색 : 정상
   4) 청색 : 의무
   5) 흰색 : 중립
3. 조작 버턴의 색상은 다음과 같다.
   1) 적 색 : 비상
   2) 황 색 : 비정상
   3) 녹 색 : 정상
   4) 청 색 : 의무조치(복귀기능 등)
   5) 흰색, 회색 또는 흑색 : 지정된 의미없음

MK	DATE	REVISIONS	CHK.	APP.
4				
3				
2				
1				

CUSTOMER		DRAWING	DESIGN	CHECKED	APPROVED	SCALE	DATE	ORDER NO.
DRAWING TITLE	MAIN POWER 1 & CONTROL CIRCUIT DIAGRAM					NONE		
		극동호이스트 주식회사 KUK DONG HOIST CO., LTD.				DWG. NO	KDC2075E001	

KOREA OCCUPATIONAL SAFETY & HEALTH AGENCY
192.168.11.76 / 2013-12-17 15:49:47
불법복제 및 배포금지

1	2	3	4	5	6	7	8	9	10	11	12	13	14	15	16	17	18	19	20.

ADR'S NO.

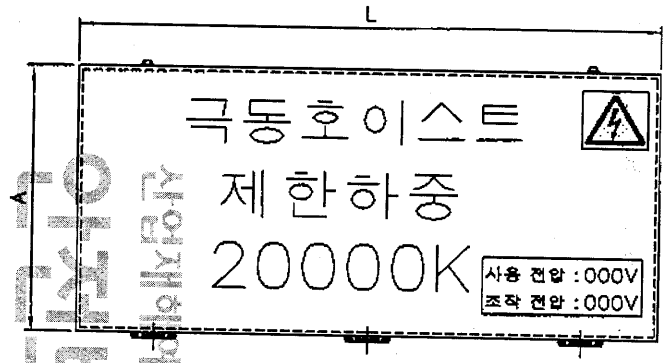

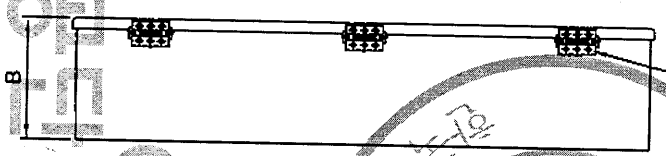

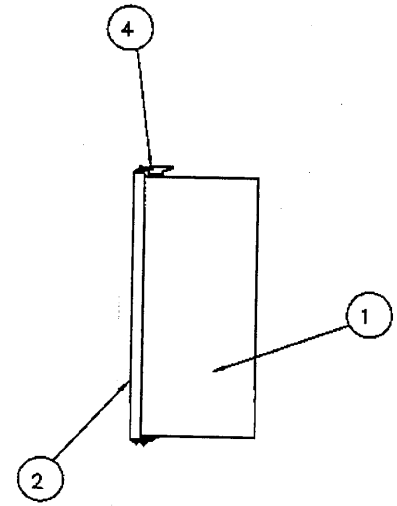

NO	DESCRIPTION	MT'L	REMARKS
1	PANEL CASE	SPC	1.6t
2	PANEL COVER	SPC	1.6t
3	HINGE	PUR'	
4	CLAMP	PUR'	
5	SPONGE	PUR'	

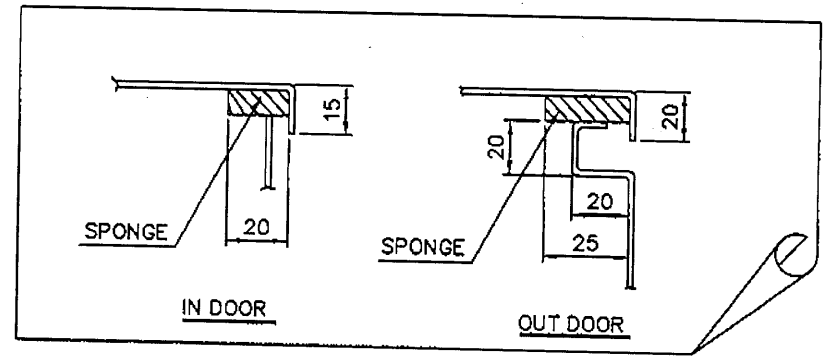

NOTE

1.PROTECTION DEGREE ;
A. INDOOR TYPE : DUST PROOF
B. OUT DOOR TYPE : SPLASH PROOF
2.FINAL PAINTING COLOR (MUNSELL NO.)
A. IN SIDE : 10B 3/5
B. OUT SIDE : 10B 3/5
3.PAINTING THICKNESS : ABOVE 40 um
4.APPLICATION VOLTAGE : 220V,380V,440V,460V,480V
5.제어용 전선 : 2.5sq KIV,HIV
6.외함 개방구조는 다음과 같다.
1) 외함 개방시 충전부분이 차단되도록 한다.
2) 외함 개방 후 충전되어있는 부분은 IP2X 이상의 직접접촉 방호가 되어있을것.

SELECTION	HOIST CAPACITY	DESCRIPTION	IN DOOR			OUT DOOR			REMARK
			A	B	L	A	B	L	
	20 TON	CREEP	650	220	850	660	220	860	
	20 TON	TRAVERSING	210	125	380	210	125	380	

MK	DATE	REVISIONS	CHK.	APP.
4				
3				
2				
1				

CUSTOMER		DRAWING	DESIGN	CHECKED	APPROVED	SCALE	DATE	ORDER NO.
DRAWING TITLE	HOISTING CONTROL BOX					NONE		
	LAY-OUT	극동호이스트 주식회사 KUK DONG HOIST CO., LTD.				DWG. NO	KDC20EB00	

192.168.11.76 / 2013-12-17 15:49:47
KOREA OCCUPATIONAL SAFETY & HEALTH AGENCY
산업재해예방
안전보건공단
사업장 근로자 대상 배포용 자료

불법복제 및 배포금지

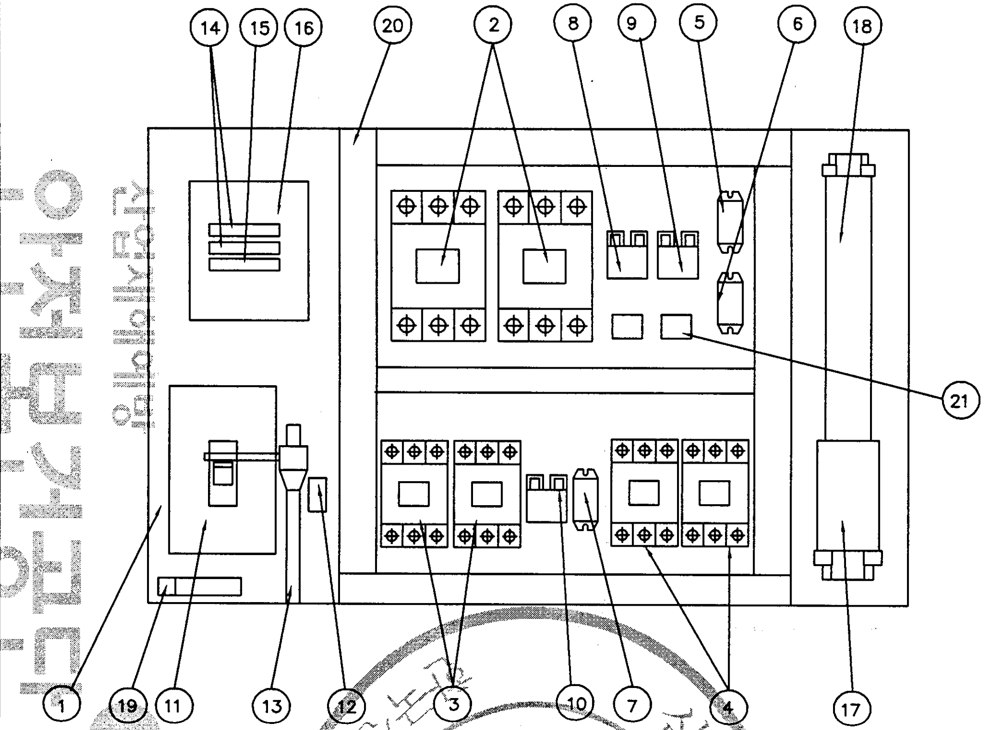

NO	DESCRIPTION	SPECIFICATION	Q'TY	REMARK
1	CHASSIS PLATE		1	아 연 도 금
2	MAGNET CONTACT	MC-185a	2	HOISTING
3	MAGNET CONTACT	DMC22C	2	CREEP HOISTING
4	MAGNET CONTACT	DMC22C	2	TRAVERSING
5	SILICON RECTIFIER	SR-60	1	HOISTING
6	SILICON RECTIFIER	SR-30	1	CREEP HOISTING
7	SILICON RECTIFIER	SR-30	1	TRAVERSING
8	E.O.C.R	SS-100	1	HOISTING
9	E.O.C.R	SS-30	1	CREEP HOISTING
10	E.O.C.R	SS-30	1	TRAVERSING
11	N.F.B	250AF/125AT	1	LS-2
12	UPPER LIMIT	AC 600V/3A	1	LS-1
13	LIMIT LEVER	SS-400	1	
14	FUSE (F11,F12)	3 A	2	
15	FUSE (F13)	5 A	1	
16	TRANSFORMER	220V/110,120V, 200VA	1	
17	TERMINAL BLOCK	100A,25A		
18	TERMINAL BLOCK	15A		
19	EARTH TERMINAL	5tx25x50	1	
20	CABLE DUCT	–	1	
21	RELAY	4a4b	2	

NOTE

1. UPPER LIMIT LS-1의 접점 허용 전류 용량 : AC 600V, 3A
2. UPPER LIMIT LS-2의 접점 허용 전류 용량 : NFB 225AF
3. EARTH TERMINAL RESISTANCE : 0.018 Ω
4. POWER SOURCE : AC. 3ø 220V 60HZ

NOTE

1. 전선의 색상은 다음과 같다.
   1) 흑색 : 교류 및 직류 전원회로
   2) 적색 : 교류 제어회로
   3) 청색 : 직류 제어회로
   4) 주황색 : 외부 연동장치 제어회로
   5) 녹색 또는 녹색과 황색 조합 : 접지
   6) 청색 : 중성선
2. CABLE MATERIAL : KIV OR EQUIVALENT, MIN SIZE : 2.5sq
3. 제어용 전선 : 2.5mm KIV,HIV
4. 제작시 다소 변경 될수있음.
5. 외함 개방구조는 다음과 같을것.
   1) 외함 개방시 충전부분이 차단되도록 할것.
   2) 외함 개방후 충전되어있는 부분은 IP2X 이상의 직접 접촉 방호가 되어있을것.

MK	DATE	REVISIONS	CHK.	APP.

CUSTOMER	
DRAWING TITLE	HOISTING CONTROL BOX(CRANE) / ARRANGEMENT DRAWING

DRAWING	DESIGN	CHECKED	APPROVED	SCALE	DATE	ORDER NO.
				NONE		

극동호이스트 주식회사 KUK DONG HOIST CO., LTD.

DWG. NO: KDC20BA22

산업재해예방 안전보건공단 KOREA OCCUPATIONAL SAFETY & HEALTH AGENCY

192.168.11.76 / 2013-12-17 15:49:47

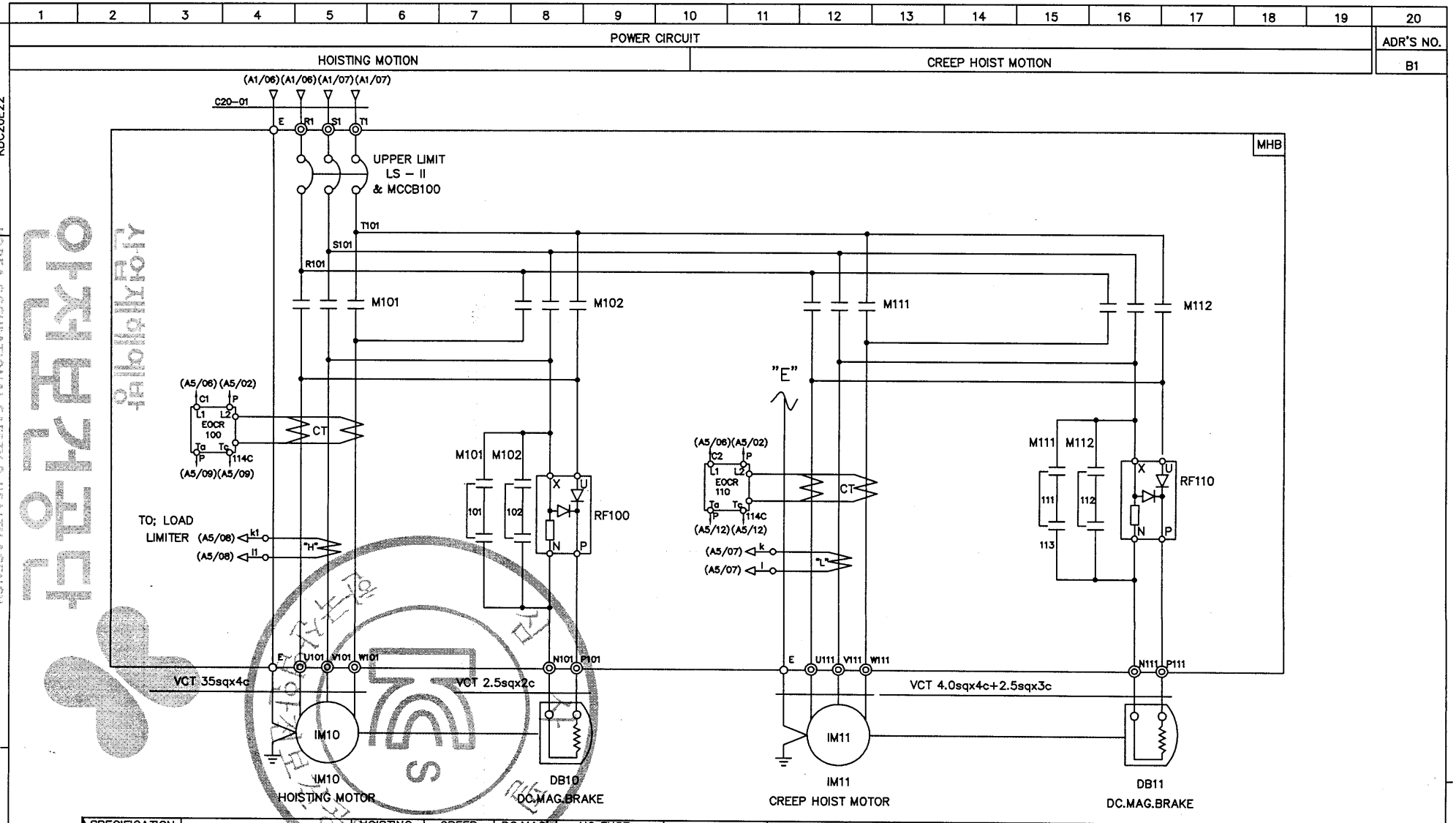

SPECIFICATION / SYMBOLS	HOISTING POWER	HOISTING MOTOR	CREEP MOTOR	DC.MAG. BRAKE	NO FUSE BREAKER	TRANSFORMER	FUSE		MAGNET CONTACTOR		UPPER LIMIT	ELECTRIC OVER CURRENT RELAY		SILICON RECTIFIER		LOAD LIMITER	CABLE
DESCRIPTION	HOIST	IM 10	IM 11	DB10, 11	LS-II & MCCB100	TR 1	F11,F12	F13	M101,M102	M111,M112	LS-I, LS-II	EOCR100	EOCR110	RF100	RF110	LOAD LIMITER	C20-01
	20TON AC3PH 220V 60Hz	17KWx8P	1.8KWx8P	DC 100V	ABS-225AF/125AT	220/110V,120V,200VA	3A	5A	MC-185a	DMC-22C	AC 600V 3A	SS-100	SS-30	SR-60	SR-30	JDL-100	VCT 50sqx4c
SELECTION / MAKER	KUKDONG				LS	SHINHAN	-		LS	DONGA	KUK DONG	ASECO				JUNGHO	DONGIL

MK	DATE	REVISIONS	CHK.	APP.
4				
3				
2				
1				

CUSTOMER		DRAWING	DESIGN	CHECKED	APPROVED	SCALE	DATE	ORDER NO.
DRAWING TITLE	CREEP HOISTING POWER & CONTROL CIRCUIT DIAGRAM					NONE		
		극동호이스트 주식회사 KUK DONG HOIST CO., LTD.				DWG. NO	KDC20E22	

KOREA OCCUPATIONAL SAFETY & HEALTH AGENCY
192.168.11.76 / 2013-12-17 15:49:47
본 보고서는 인터넷 배포금지

1	2	3	4	5	6	7	8	9	10	11	12	13	14	15	16	17	18	19	20

POWER CIRCUIT

TRAVERSING MOTION

ADR'S NO. C1

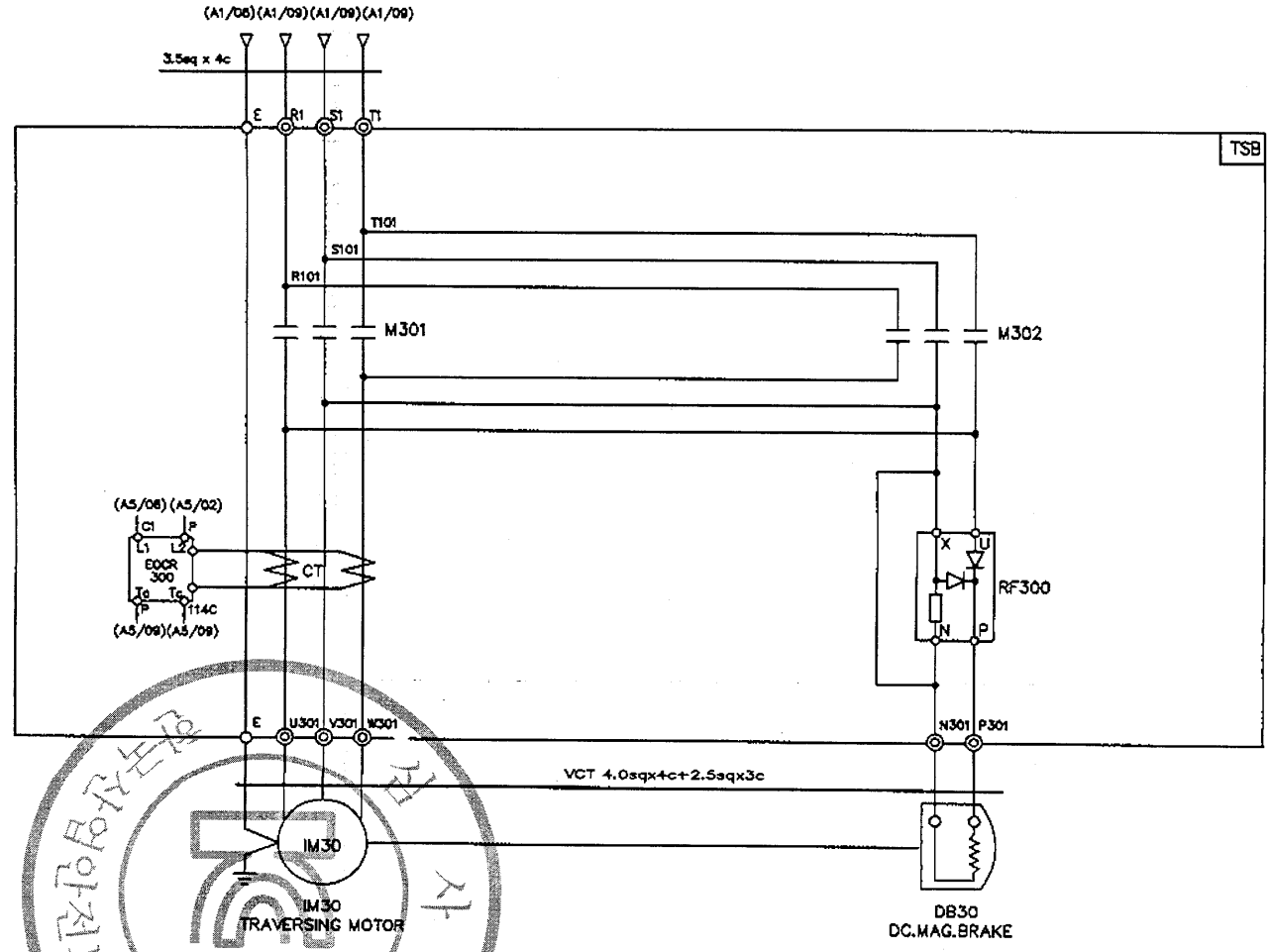

SPECIFICATION / SYMBOLS	TRAVERSING MOTOR	DC MAG' BRAKE	MAGNET CONTACTOR	SILICON RECTIFIER	ELECTRIC OVER CURRENT RELAY	LIMIT SWTCH
DESCRIPTION	IM 30	DB 30	M301 , M302	RF 300	EOCR 300	LS-301 , LS-302
	1.5KW x 4P AC 3PH 220V 60Hz	DC 100V	DOC-22P AC 110V	SR-30	SS-30	HY - W904
	1.0KW x 6P AC 3PH 220V 60Hz	DC 100V	DOC-22P AC 110V	SR-30	SS-30	HY - W904
SELECTION / MAKER	KUKDONG		DAERYUK	ASECO		

MK	DATE	REVISIONS	CHK.	APP.
4				
3				
2				
1				

CUSTOMER		DRAWING	DESIGN	CHECKED	APPROVED	SCALE	DATE	ORDER NO.
DRAWING TITLE	TRAVERSING POWER CONTROL CIRCUIT DIAGRAM					NONE		
		국동호이스트 주식회사 KUK DONG HOIST CO., LTD.				DWG. NO	KDC20E23	

한국산업안전보건공단 KOREA OCCUPATIONAL SAFETY & HEALTH AGENCY
192.168.11.76 / 2013-12-17 15:49:47

1	2	3	4	5	6	7	8	9	10	11	12	13	14	15	16	17	18	19	20
POWER CIRCUIT																			ADR'S NO.
TRAVERSING MOTION																			C2

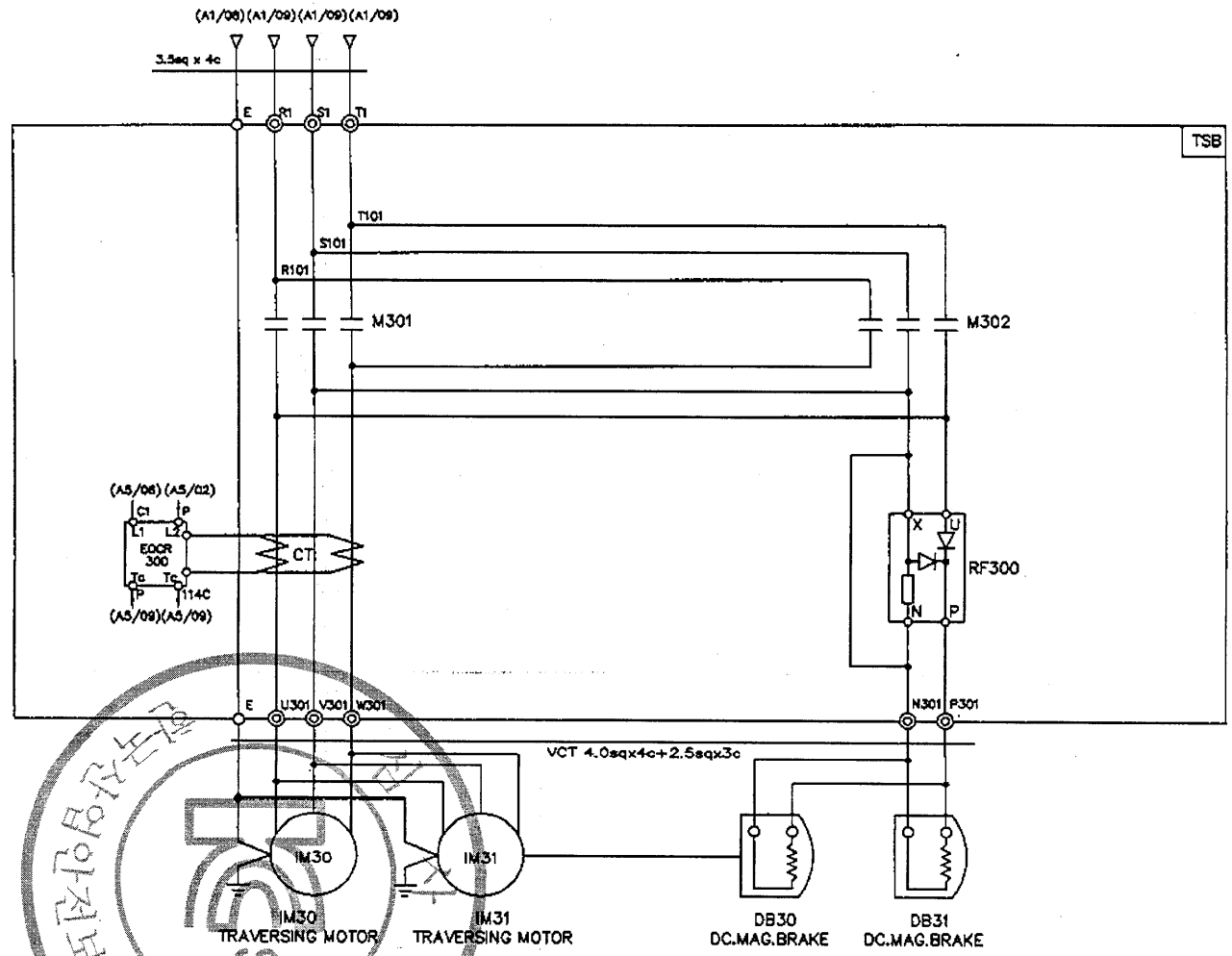

SPECIFICATION / SYMBOLS	TRAVERSING MOTOR	DC MAG' BRAKE	MAGNET CONTACTOR	SILICON RECTIFIER	ELECTRIC OVER CURRENT RELAY	LIMIT SWTCH
DESCRIPTION	IM 30 , 1M31	DB 30	M301 , M302	RF 300	EOCR 300	LS-301 , LS-302
	1.5KW x 4P AC 3PH 220V 60Hz	DC 100V	DOC-22P AC 110V	SR-30	SS-30	HY - W904
	1.0KW x 6P AC 3PH 220V 60Hz	DC 100V	DOC-22P AC 110V	SR-30	SS-30	HY - W904
SELECTION / MAKER	KUK DONG		DAERYUK	ASECO		

MK	DATE	REVISIONS	CHK.	APP.
⚠				
⚠				
⚠				
⚠				

CUSTOMER		DRAWING	DESIGN	CHECKED	APPROVED	SCALE	DATE	ORDER NO.
DRAWING TITLE	TRAVERSING POWER CONTROL CIRCUIT					NONE		
	DIAGRAM	KD 국동호이스트 주식회사 KUK DONG HOIST CO., LTD.				DWG. NO	KDC20E24	

한국산업안전보건공단
KOREA OCCUPATIONAL SAFETY & HEALTH AGENCY
192.168.11.76 / 2013-12-17 15:49:47

1	2	3	4	5	6	7	8	9	10	11	12	13	14	15	16	17	18	19	20

POWER CIRCUIT

TRAVERSING MOTION

ADR'S NO. C2

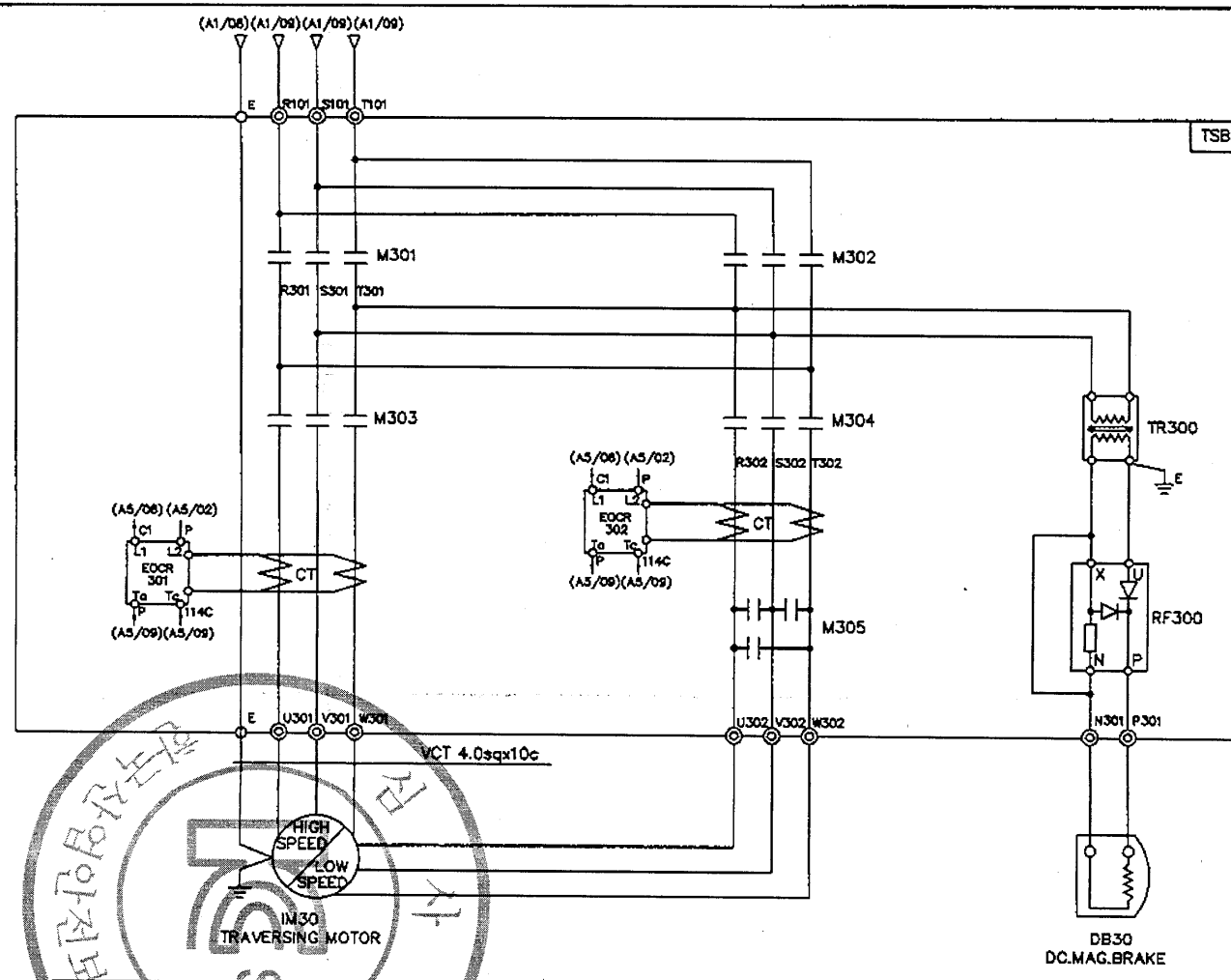

SPECIFICATION / SYMBOLS / DESCRIPTION		TRAVERSING MOTOR	DC MAG' BRAKE	MAGNET CONTACTOR		SILICON RECTIFIER	ELECTRIC OVER CURRENT RELAY	TRANSFORMER
		IM 30	DB30	M301 , M302 , M303	M304 , M305	RF 300	EOCR 301,302	TR300
	220V	1.5/0.75KWx6/12P AC3PH 220V 60Hz	DC 100V	DOC-22P	DOC-22R	SR-30	SS-30	AC220/220V, 300VA
	220V	1.0/0.5KWx4/8P AC3PH 220V 60Hz	DC 100V	DOC-22P	DOC-22R	SR-30	SS-30	AC220/220V, 300VA
SELECTION / MAKER		KUKDONG		DAERYUK		ASECO		SHINHAN

MK	DATE	REVISIONS	CHK.	APP.
4				
3				
2				
1				

CUSTOMER		DRAWING	DESIGN	CHECKED	APPROVED	SCALE	DATE	ORDER NO.
DRAWING TITLE	TRAVERSING POWER CONTROL CIRCUIT DIAGRAM					NONE		
		국동호이스트 주식회사 KUK DONG HOIST CO., LTD.				DWG. NO	KDC20E25	

192.168.11.76 / 2013-12-17 15:49:47
아전산업공단 KOREA OCCUPATIONAL SAFETY & HEALTH AGENCY
사업장에서 배부
정보공개 및 배포금지

1	2	3	4	5	6	7	8	9	10	11	12	13	14	15	16	17	18	19	20

POWER CIRCUIT

TRAVERSING MOTION

ADR'S NO. C2

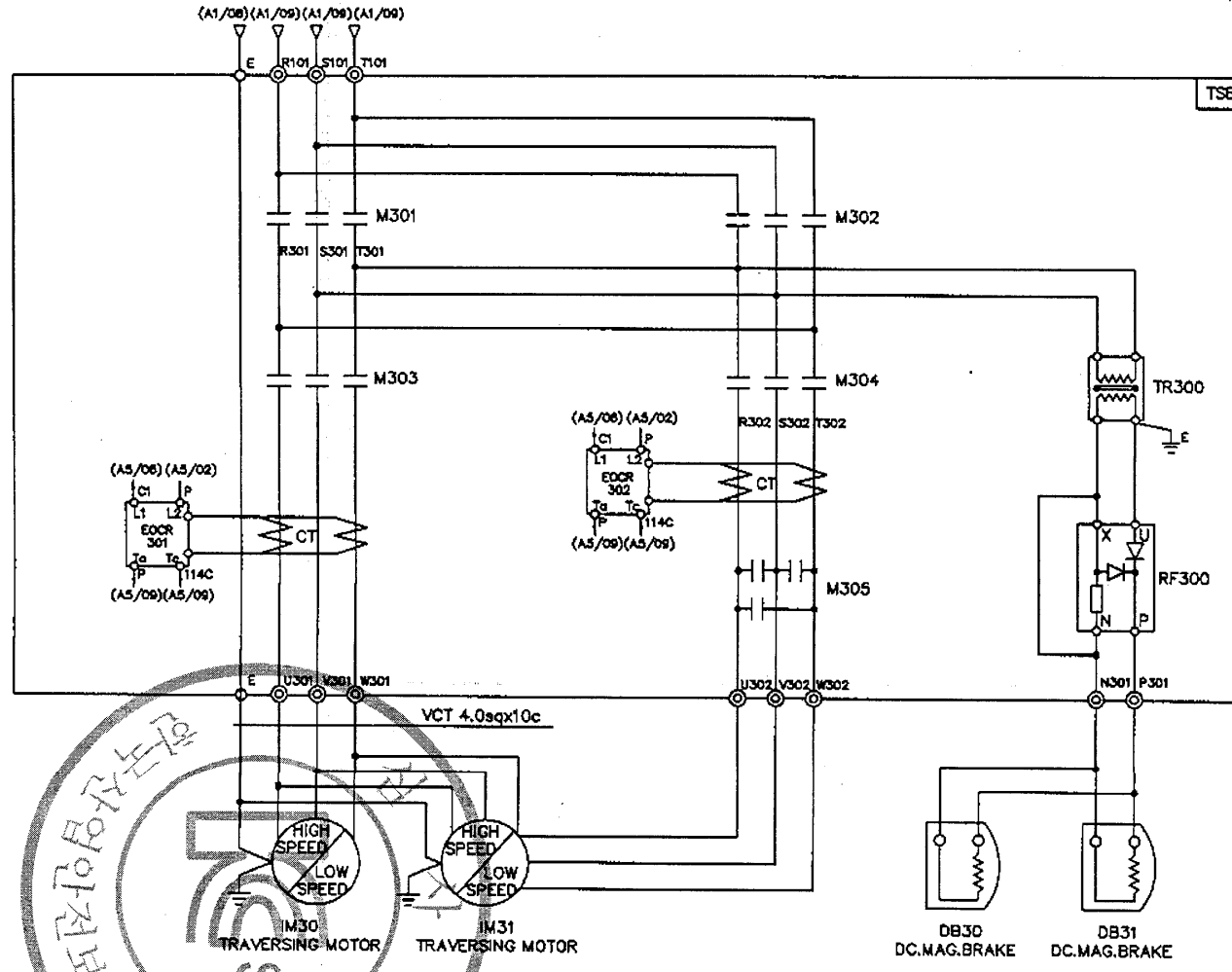

SPECIFICATION / SYMBOLS / DESCRIPTION		TRAVERSING MOTOR	DC MAG' BRAKE	MAGNET CONTACTOR		SILICON RECTIFIER	ELECTRIC OVER CURRENT RELAY	TRANSFORMER
		IM 30 , IM31	DB30 , DB31	M301 , M302 , M303	M304 , M305	RF 300	EOCR 301,302	TR300
	220V	1.5/0.75KWx6/12P AC3PH 220V 60Hz	DC 100V	DOC-22P	DOC-22R	SR-30	SS-30	AC220/220V, 300VA
	220V	1.0/0.5KWx4/8P AC3PH 220V 60Hz	DC 100V	DOC-22P	DOC-22R	SR-30	SS-30	AC220/220V, 300VA
SELECTION MAKER		KUKDONG		DAERYUK		ASECO		SHINHAN

MK	DATE	REVISIONS	CHK.	APP.
4				
3				
2				
1				

CUSTOMER		DRAWING	DESIGN	CHECKED	APPROVED	SCALE	DATE	ORDER NO.
DRAWING TITLE	TRAVERSING POWER CONTROL CIRCUIT DIAGRAM					NONE		
		국동호이스트 주식회사 KUK DONG HOIST CO., LTD.				DWG. NO	KDC20E26	

192.168.11.76 / 2013-12-17 15:49:47
한국산업안전보건공단 KOREA OCCUPATIONAL SAFETY & HEALTH AGENCY
본 자료는 배포 금지

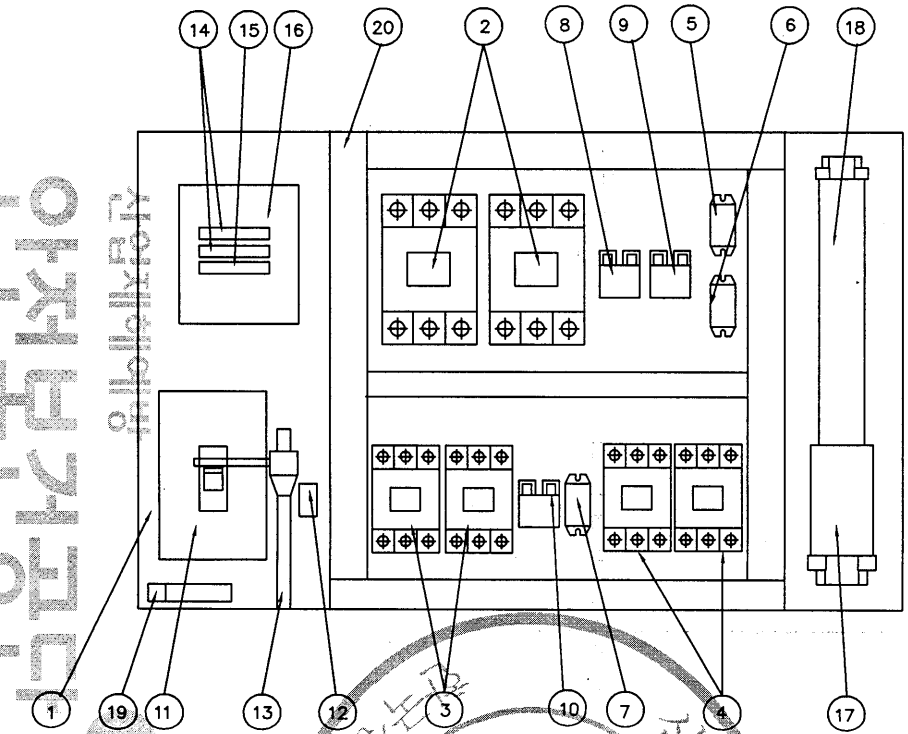

NO	DESCRIPTION	SPECIFICATION	Q'TY	REMARK
1	CHASSIS PLATE		1	아연도금
2	MAGNET CONTACT	MC-130a	2	HOISTING
3	MAGNET CONTACT	DMC22C	2	CREEP HOISTING
4	MAGNET CONTACT	DMC22C	2	TRAVERSING
5	SILICON RECTIFIER	SR-60	1	HOISTING
6	SILICON RECTIFIER	SR-30	1	CREEP HOISTING
7	SILICON RECTIFIER	SR-30	1	TRAVERSING
8	E.O.C.R	SS-60	1	HOISTING
9	E.O.C.R	SS-30	1	CREEP HOISTING
10	E.O.C.R	SS-05	1	TRAVERSING
11	N.F.B	125AF/75AT	1	LS-2
12	UPPER LIMIT	AC 600V/3A	1	LS-1
13	LIMIT LEVER	SS-400	1	
14	FUSE (F11,F12)	2 A	2	
15	FUSE (F13)	5 A	1	
16	TRANSFORMER	380V/110,120V, 200VA	1	
17	TERMINAL BLOCK	100A,25A		
18	TERMINAL BLOCK	15A		
19	EARTH TERMINAL	5tx25x50	1	
20	CABLE DUCT	-	1	
21	RELAY	4a4b	2	

NOTE

1. UPPER LIMIT LS-1의 접점 허용 전류 용량. : AC 600V, 3A
2. UPPER LIMIT LS-2의 접점 허용 전류 용량. : NFB 103AF
3. EARTH TERMINAL RESISTANCE : 0.018 Ω
4. POWER SOURCE : AC. 3ø 380V 60HZ

NOTE

1. 전선의 색상은 다음과 같다.
   1) 흑색 : 고류 및 직류 전원회로
   2) 적색 : 고류 제어회로
   3) 청색 : 직류 제어회로
   4) 주황색 : 외부 연동장치 제어회로
   5) 녹색 또는 녹색과 황색 조합 : 접지
   6) 청색 : 중성선
2. CABLE MATERIAL : KIV OR EQUIVALENT, MIN SIZE : 2.5sq
3. 제어용 전선 : 2.5mm KIV,HIV
4. 제작시 다소 변경 될수있음.
5. 외함 개방구조는 다음과 같을것.
   1) 외함 개방시 충전부분이 차단되도록 할것.
   2) 외함 개방후 충전되어있는 부분은 IP2X 이상의 직접 접촉 방호가 되어있을것.

MK	DATE	REVISIONS	CHK.	APP.
4				
3				
2				
1				

CUSTOMER	
DRAWING TITLE	HOISTING CONTROL BOX(CRANE)
	ARRANGEMENT DRAWING

DRAWING	DESIGN	CHECKED	APPROVED	SCALE	DATE	ORDER NO.
				NONE		

극동호이스트 주식회사
KUK DONG HOIST CO., LTD.

DWG. NO KDC20BA32

불법복제 및 배포금지
한국산업안전보건공단
KOREA OCCUPATIONAL SAFETY & HEALTH AGENCY
192.168.11.76 / 2013-12-17 15:49:47

불법복제 및 배포금지

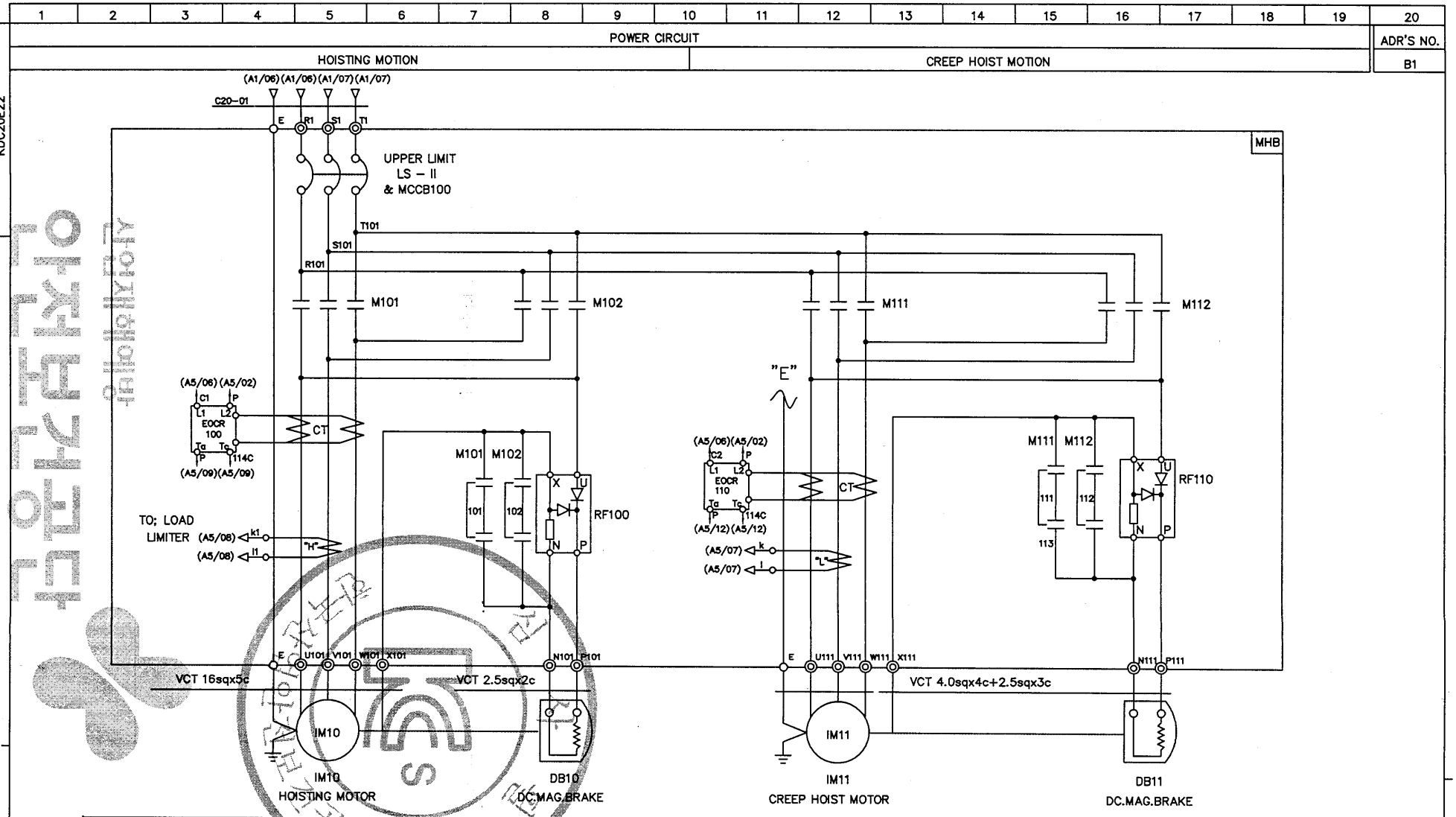

SPECIFICATION / SYMBOLS	HOISTING POWER	HOISTING MOTOR	CREEP MOTOR	DC.MAG BRAKE	NO FUSE BREAKER	TRANSFORMER	FUSE		MAGNET CONTACTOR		UPPER LIMIT	ELECTRIC OVER CURRENT RELAY		SILICON RECTIFIER		LOAD LIMITER	CABLE
DESCRIPTION	HOIST	IM 10	IM 11	DB10, 11	LS-II & MCCB100	TR 1	F11,F12	F13	M101,M102	M111,M112	LS-I, LS-II	EOCR100	EOCR110	RF100	RF110	LOAD LIMITER	C20-01
	20TON AC3PH 380V 60Hz	17KWx8P	1.8KWx8P	DC 100V	ABS-103AF/75AT	380/110V,120V,200VA	2A	5A	MC-130a	DMC-22C	AC 600V 3A	SS-60	SS-30	SR-60	SR-30	JDL-100	VCT 25sqx4c
SELECTION / MAKER	KUKDONG				LS	SHINHAN	-		LS	DONGA	KUK DONG	ASECO				JUNGHO	DONGIL

MK	DATE	REVISIONS	CHK.	APP.
4				
3				
2				
1				

CUSTOMER		DRAWING	DESIGN	CHECKED	APPROVED	SCALE	DATE	ORDER NO.
DRAWING TITLE	CREEP HOISTING POWER & CONTROL					NONE		
	CIRCUIT DIAGRAM	극동호이스트 주식회사 KUK DONG HOIST CO., LTD.				DWG. NO	KDC20E32	

192.168.11.76 / 2013-12-17 15:49:47
KOREA OCCUPATIONAL SAFETY & HEALTH AGENCY
한국산업안전보건공단
산업재해예방

1	2	3	4	5	6	7	8	9	10	11	12	13	14	15	16	17	18	19	20

POWER CIRCUIT

TRAVERSING MOTION

ADR'S NO. C1

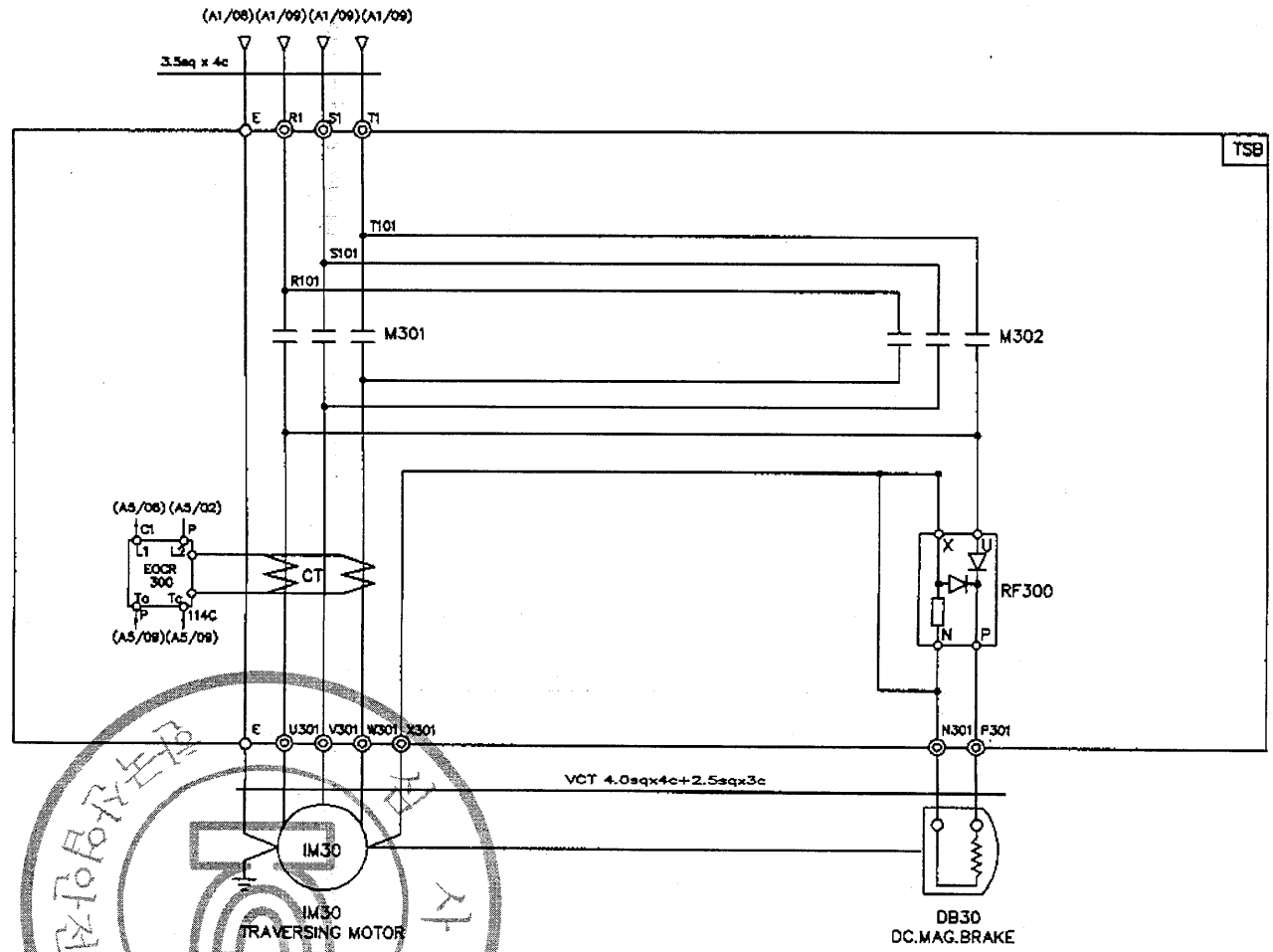

SPECIFICATION / SYMBOLS	TRAVERSING MOTOR	DC MAG' BRAKE	MAGNET CONTACTOR	SILICON RECTIFIER	ELECTRIC OVER CURRENT RELAY	LIMIT SWTCH
DESCRIPTION	IM 30	DB 30	M301 , M302	RF 300	EOCR 300	LS-301 , LS-302
	1.5KW x 4P AC 3PH 380V 60Hz	DC 100V	DOC-22P AC 110V	SR-30	SS-05	HY - W904
	1.0KW x 6P AC 3PH 380V 60Hz	DC 100V	DOC-22P AC 110V	SR-30	SS-05	HY - W904
SELECTION MAKER	KUKDONG		DAERYUK	ASECO		

MK	DATE	REVISIONS	CHK.	APP.
4				
3				
2				
1				

CUSTOMER		DRAWING	DESIGN	CHECKED	APPROVED	SCALE	DATE	ORDER NO.
DRAWING TITLE	TRAVERSING POWER CONTROL CIRCUIT DIAGRAM					NONE		
		국동호이스트 주식회사 KUK DONG HOIST CO., LTD.				DWG. NO	KDC20E33	

192.168.11.76 / 2013-12-17 15:49:47
아시아에서 가장 믿을 수 있는 기업
KOREA OCCUPATIONAL SAFETY & HEALTH AGENCY
한국산업안전보건공단
본 자료는 무단 배포 금지

1	2	3	4	5	6	7	8	9	10	11	12	13	14	15	16	17	18	19	20

POWER CIRCUIT

TRAVERSING MOTION

ADR'S NO. C2

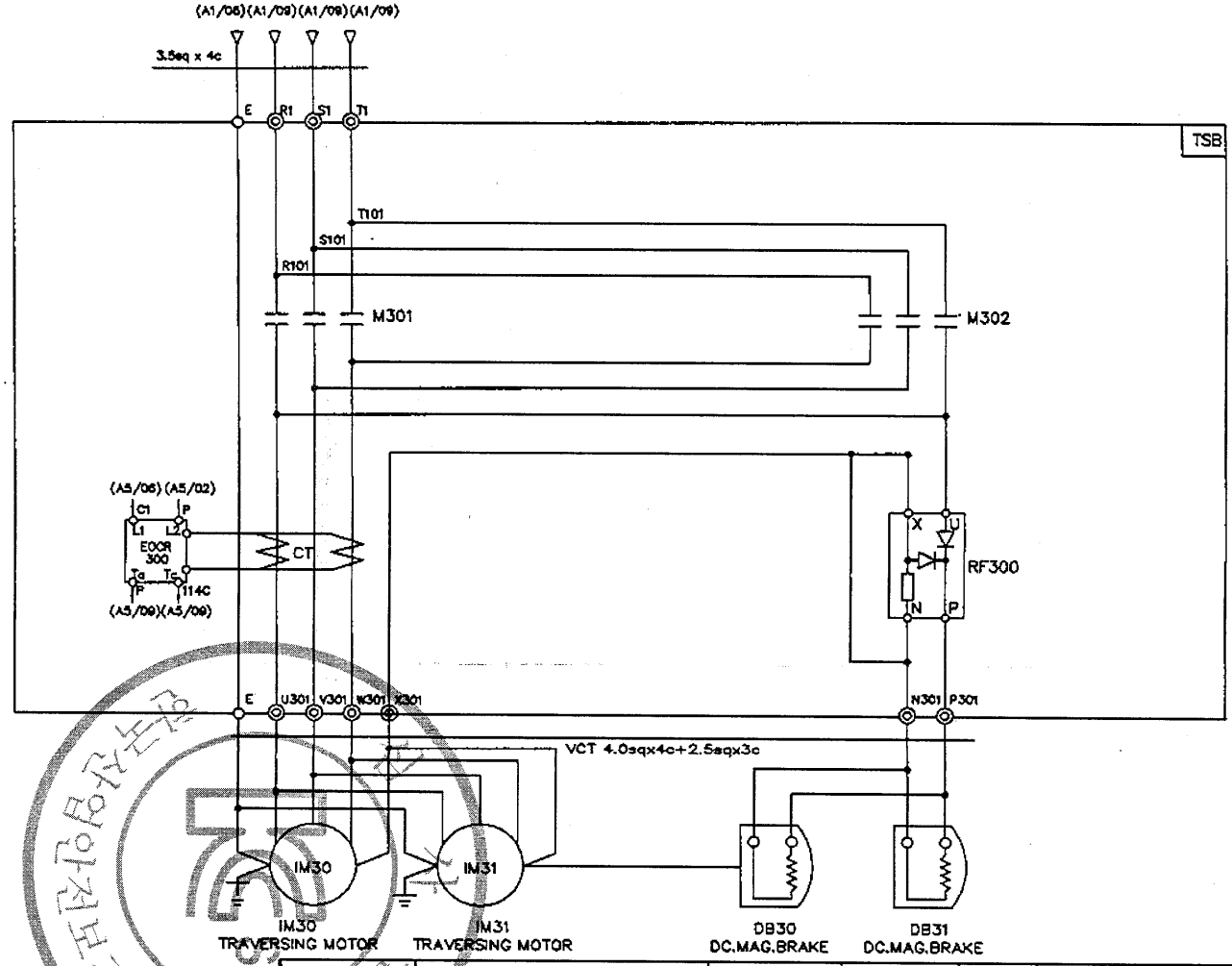

SPECIFICATION / SYMBOLS	TRAVERSING MOTOR	DC MAG' BRAKE	MAGNET CONTACTOR	SILICON RECTIFIER	ELECTRIC OVER CURRENT RELAY	LIMIT SWTCH
DESCRIPTION	IM 30 , 1M31	DB 30	M301 , M302	RF 300	EOCR 300	LS-301 , LS-302
	1.5KW x 4P AC 3PH 380V 60Hz	DC 100V	DOC-22P AC 110V	SR-30	SS-30	HY - W904
	1.0KW x 6P AC 3PH 380V 60Hz	DC 100V	DOC-22P AC 110V	SR-30	SS-30	HY - W904
SELECTION / MAKER	KUK DONG		DAERYUK	ASECO		

MK	DATE	REVISIONS	CHK.	APP.
4				
3				
2				
1				

CUSTOMER		DRAWING	DESIGN	CHECKED	APPROVED	SCALE	DATE	ORDER NO.
DRAWING TITLE	TRAVERSING POWER CONTROL CIRCUIT DIAGRAM					NONE		
		KD 국동호이스트 주식회사 KUK DONG HOIST CO., LTD.				DWG. NO	KDC20E34	

사업재해예방
아주대학교
KOREA OCCUPATIONAL SAFETY & HEALTH AGENCY
192.168.11.76 / 2013-12-17 15:49:47

1	2	3	4	5	6	7	8	9	10	11	12	13	14	15	16	17	18	19	20

POWER CIRCUIT

TRAVERSING MOTION

ADR'S NO. C2

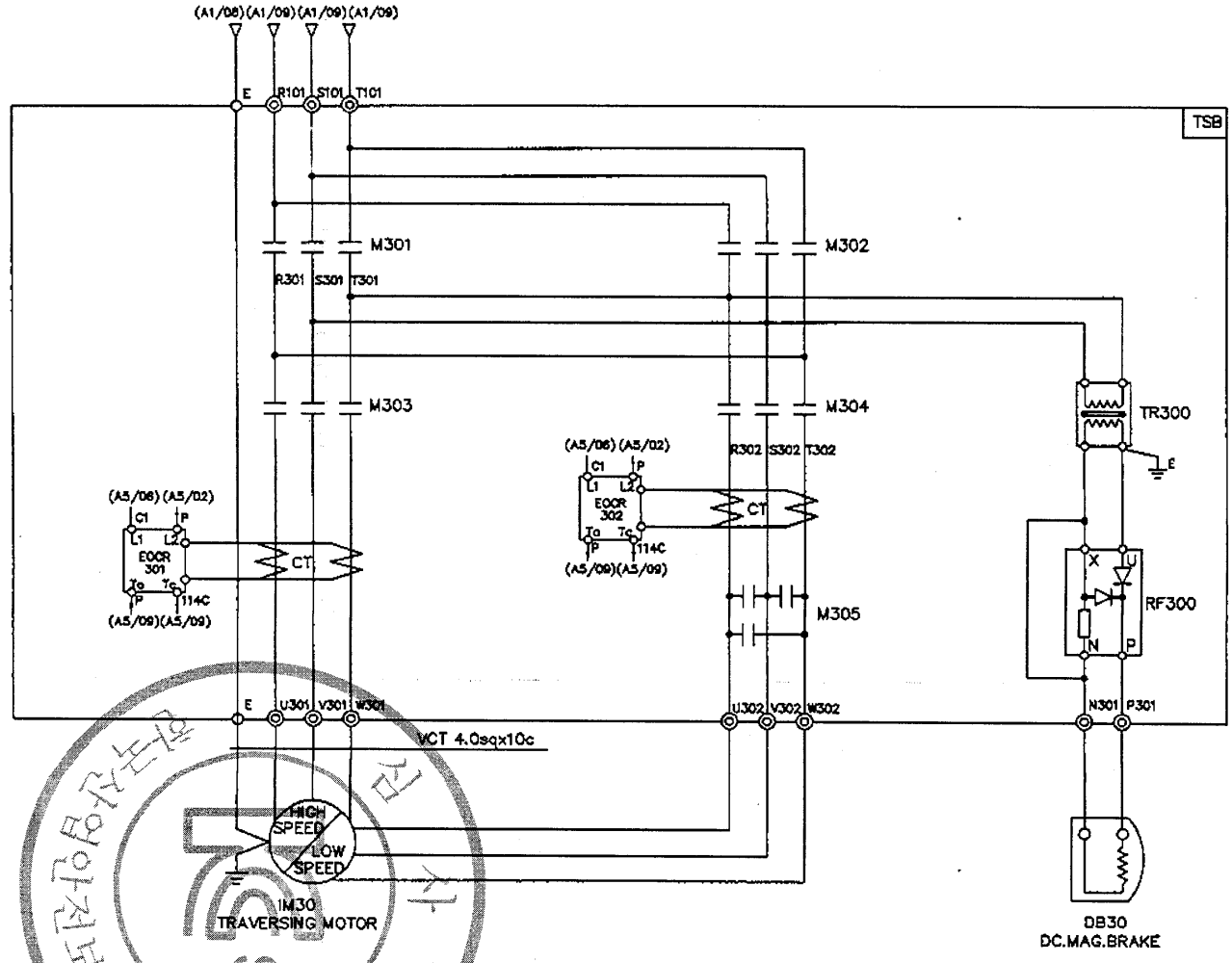

SPECIFICATION / SYMBOLS / DESCRIPTION		TRAVERSING MOTOR	DC MAG' BRAKE	MAGNET CONTACTOR		SILICON RECTIFIER	ELECTRIC OVER CURRENT RELAY	TRANSFORMER
		IM 30	DB30	M301 , M302 , M303	M304 , M305	RF 300	EOCR 301,302	TR300
	380V	1.5/0.75KWx6/12P AC3PH 380V 60Hz	DC 100V	DOC-22P	DOC-22R	SR-30	SS-30	AC380/220V, 300VA
	380V	1.0/0.5KWx4/8P AC3PH 380V 60Hz	DC 100V	DOC-22P	DOC-22R	SR-30	SS-30	AC380/220V, 300VA
SELECTION / MAKER		KUKDONG		DAERYUK		ASECO		SHINHAN

MK	DATE	REVISIONS	CHK.	APP.
4				
3				
2				
1				

CUSTOMER		DRAWING	DESIGN	CHECKED	APPROVED	SCALE	DATE	ORDER NO.
DRAWING TITLE	TRAVERSING POWER CONTROL CIRCUIT DIAGRAM					NONE		
		국동호이스트 주식회사 KUK DONG HOIST CO., LTD.				DWG. NO	KDC20E35	

산업재해예방 안전보건공단 KOREA OCCUPATIONAL SAFETY & HEALTH AGENCY
192.168.11.76 / 2013-12-17 15:49:47
불법복제 및 배포금지

1	2	3	4	5	6	7	8	9	10	11	12	13	14	15	16	17	18	19	20

POWER CIRCUIT

TRAVERSING MOTION

ADR'S NO. C2

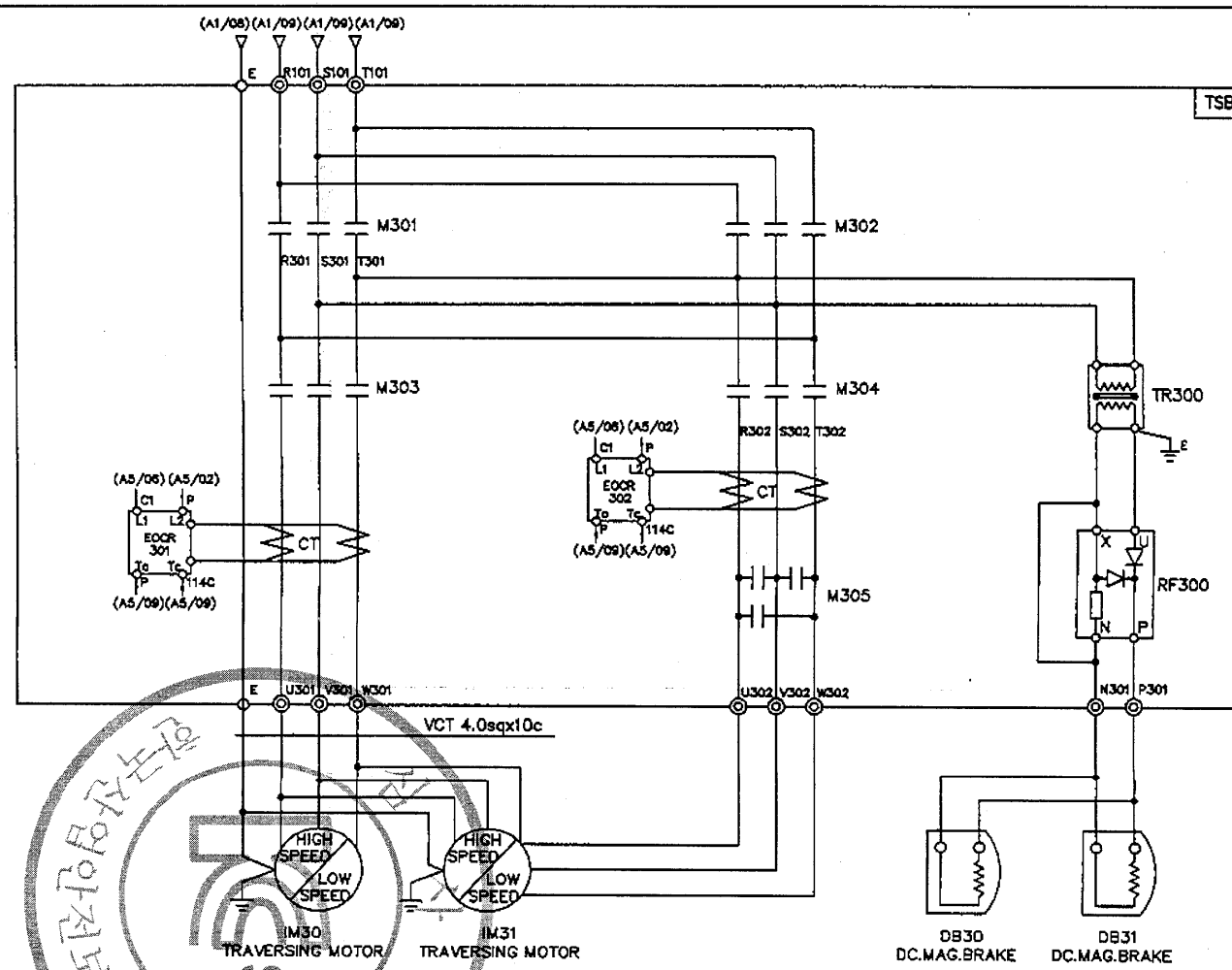

SPECIFICATION / SYMBOLS / DESCRIPTION		TRAVERSING MOTOR	DC MAG' BRAKE	MAGNET CONTACTOR		SILICON RECTIFIER	ELECTRIC OVER CURRENT RELAY	TRANSFORMER
		IM 30 , IM31	DB30 , DB31	M301 , M302 , M303	M304 , M305	RF 300	EOCR 301,302	TR300
	380V	1.5/0.75KWx6/12P AC3PH 380V 60Hz	DC 100V	DOC-22P	DOC-22R	SR-30	SS-30	AC380/220V, 300VA
	380V	1.0/0.5KWx4/8P AC3PH 380V 60Hz	DC 100V	DOC-22P	DOC-22R	SR-30	SS-30	AC380/220V, 300VA
SELECTION MAKER		KUKDONG		DAERYUK		ASECO		SHINHAN

MK	DATE	REVISIONS	CHK.	APP.
4				
3				
2				
1				

CUSTOMER		DRAWING	DESIGN	CHECKED	APPROVED	SCALE	DATE	ORDER NO.
DRAWING TITLE	TRAVERSING POWER CONTROL CIRCUIT DIAGRAM					NONE		
		국동호이스트 주식회사 KUK DONG HOIST CO., LTD.				DWG. NO	KDC20E36	

한국산업안전보건공단 KOREA OCCUPATIONAL SAFETY & HEALTH AGENCY
192.168.11.76 / 2013-12-17 15:49:47
불법복제 금지

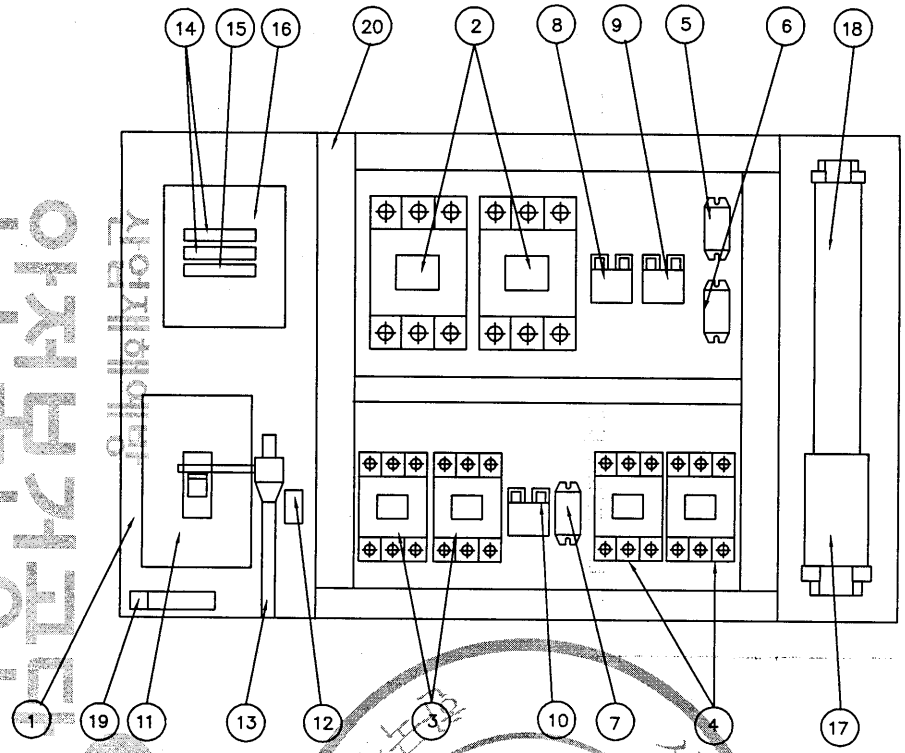

NO	DESCRIPTION	SPECIFICATION	Q'TY	REMARK
1	CHASSIS PLATE		1	아연도금
2	MAGNET CONTACT	MC-130a	2	HOISTING
3	MAGNET CONTACT	DMC22C	2	CREEP HOISTING
4	MAGNET CONTACT	DMC22C	2	TRAVERSING
5	SILICON RECTIFIER	SR-60	1	HOISTING
6	SILICON RECTIFIER	SR-30	1	CREEP HOISTING
7	SILICON RECTIFIER	SR-30	1	TRAVERSING
8	E.O.C.R	SS-60	1	HOISTING
9	E.O.C.R	SS-30	1	CREEP HOISTING
10	E.O.C.R	SS-05	1	TRAVERSING
11	N.F.B	125AF/60AT	1	LS-2
12	UPPER LIMIT	AC 600V/3A	1	LS-1
13	LIMIT LEVER	SS-400	1	
14	FUSE (F11,F12)	2 A	2	
15	FUSE (F13)	5 A	1	
16	TRANSFORMER	440V/110,120V, 200VA	1	
17	TERMINAL BLOCK	100A,25A		
18	TERMINAL BLOCK	15A		
19	EARTH TERMINAL	5tx25x50	1	
20	CABLE DUCT	-	1	
21	RELAY	4a4b	2	

NOTE

1. UPPER LIMIT LS-1의 접점 허용 전류 용량 : AC 600V, 3A
2. UPPER LIMIT LS-2의 접점 허용 전류 용량 : NFB 103AF
3. EARTH TERMINAL RESISTANCE : 0.018 Ω
4. POWER SOURCE : AC. 3ø 440V 60HZ

NOTE

1. 전선의 색상은 다음과 같다.
   1) 흑색 : 고류 및 직류 전원회로
   2) 적색 : 고류 제어회로
   3) 청색 : 직류 제어회로
   4) 주황색 : 외부 연동장치 제어회로
   5) 녹색 또는 녹색과 황색 조합 : 접지
   6) 청색 : 중성선
2. CABLE MATERIAL : KIV OR EQUIVALENT
   MIN SIZE : 2.5sq
3. 제어용 전선 : 2.5mm KIV,HIV
4. 제작시 다소 변경 될수있음.
5. 외함 개방구조는 다음과 같을것.
   1) 외함 개방시 충전부분이 차단되도록 할것.
   2) 외함 개방후 충전되어있는 부분은 IP2X 이상의 직접 접촉 방호가 되어있을것.

MK	DATE	REVISIONS	CHK.	APP.
4				
3				
2				
1				

CUSTOMER		DRAWING	DESIGN	CHECKED	APPROVED	SCALE	DATE	ORDER NO.
DRAWING TITLE	HOISTING CONTROL BOX(CRANE)					NONE		
	ARRANGEMENT DRAWING	극동호이스트 주식회사 KUK DONG HOIST CO., LTD.				DWG. NO	KDC20BA42	

불법복제 및 배포금지
KOREA OCCUPATIONAL SAFETY & HEALTH AGENCY
192.168.11.76 / 2013-12-17 15:49:47

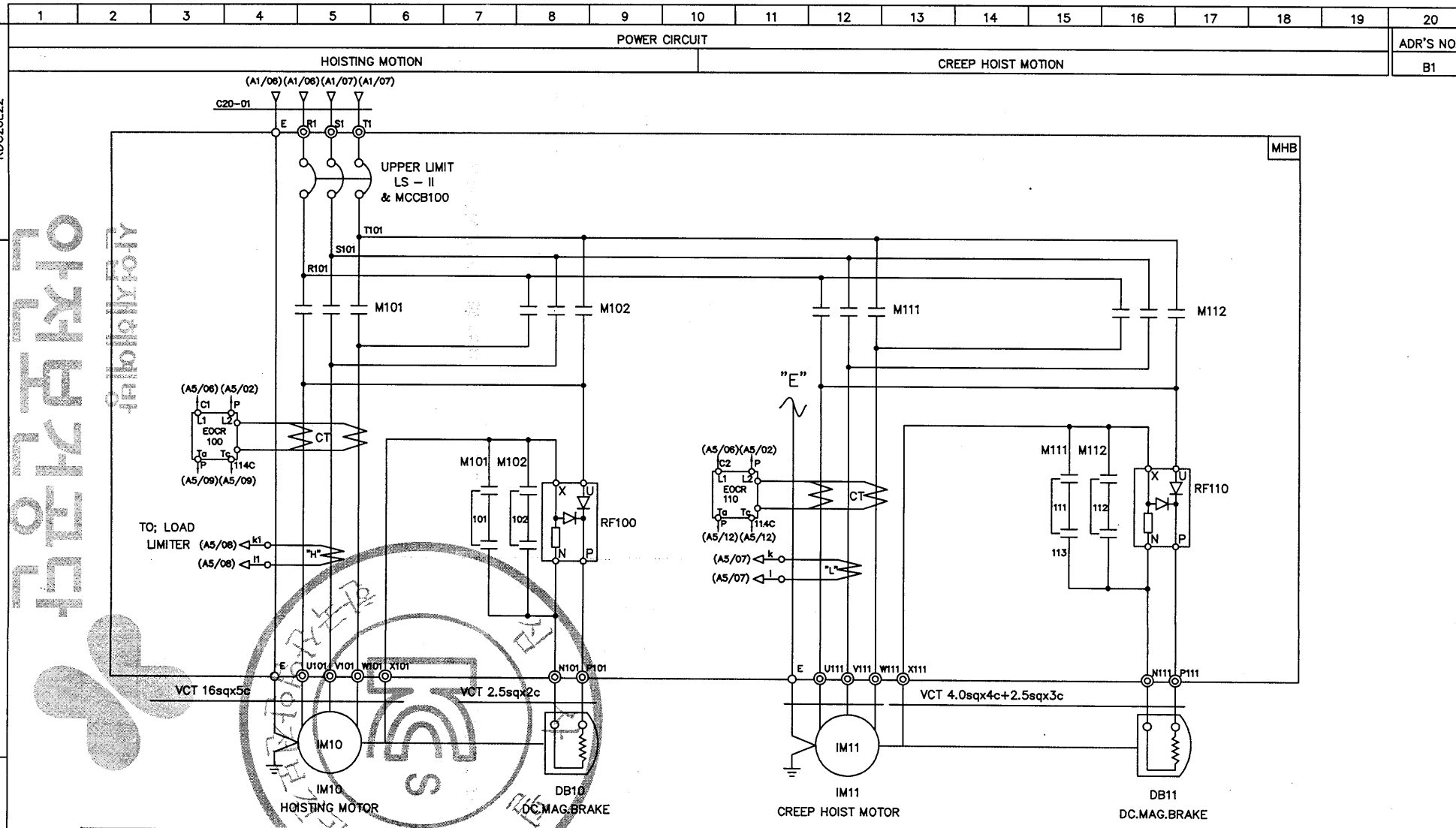

SPECIFICATION / SYMBOLS	HOISTING POWER	HOISTING MOTOR	CREEP MOTOR	DC.MAG BRAKE	NO FUSE BREAKER	TRANSFORMER	FUSE		MAGNET CONTACTOR		UPPER LIMIT	ELECTRIC OVER CURRENT RELAY		SILICON RECTIFIER		LOAD LIMITER	CABLE
DESCRIPTION	HOIST	IM 10	IM 11	DB10, 11	LS–II & MCCB100	TR 1	F11,F12	F13	M101,M102	M111,M112	LS–I, LS–II	EOCR100	EOCR110	RF100	RF110	LOAD LIMITER	C20–01
	20TON AC3PH 440V 60Hz	17KWx8P	1.8KWx8P	DC 100V	ABS–103AF/60AT	440/110V,120V,200VA	2A	5A	MC–130a	DMC–22C	AC 600V 3A	SS–60	SS–30	SR–60	SR–30	JDL–100	VCT 25sqx4c
SELECTION / MAKER	KUKDONG				LS	SHINHAN	–		LS	DONGA	KUK DONG	ASECO				JUNGHO	DONGIL

MK	DATE	REVISIONS	CHK.	APP.
4				
3				
2				
1				

CUSTOMER		DRAWING	DESIGN	CHECKED	APPROVED	SCALE	DATE	ORDER NO.
DRAWING TITLE	CREEP HOISTING POWER & CONTROL CIRCUIT DIAGRAM					NONE		
		극동호이스트 주식회사 KUK DONG HOIST CO., LTD.				DWG. NO	KDC20E42	

불법복제 및 배포금지
KOREA OCCUPATIONAL SAFETY & HEALTH AGENCY
192.168.11.76 / 2013-12-17 15:49:47

1	2	3	4	5	6	7	8	9	10	11	12	13	14	15	16	17	18	19	20

POWER CIRCUIT

TRAVERSING MOTION

ADR'S NO. C1

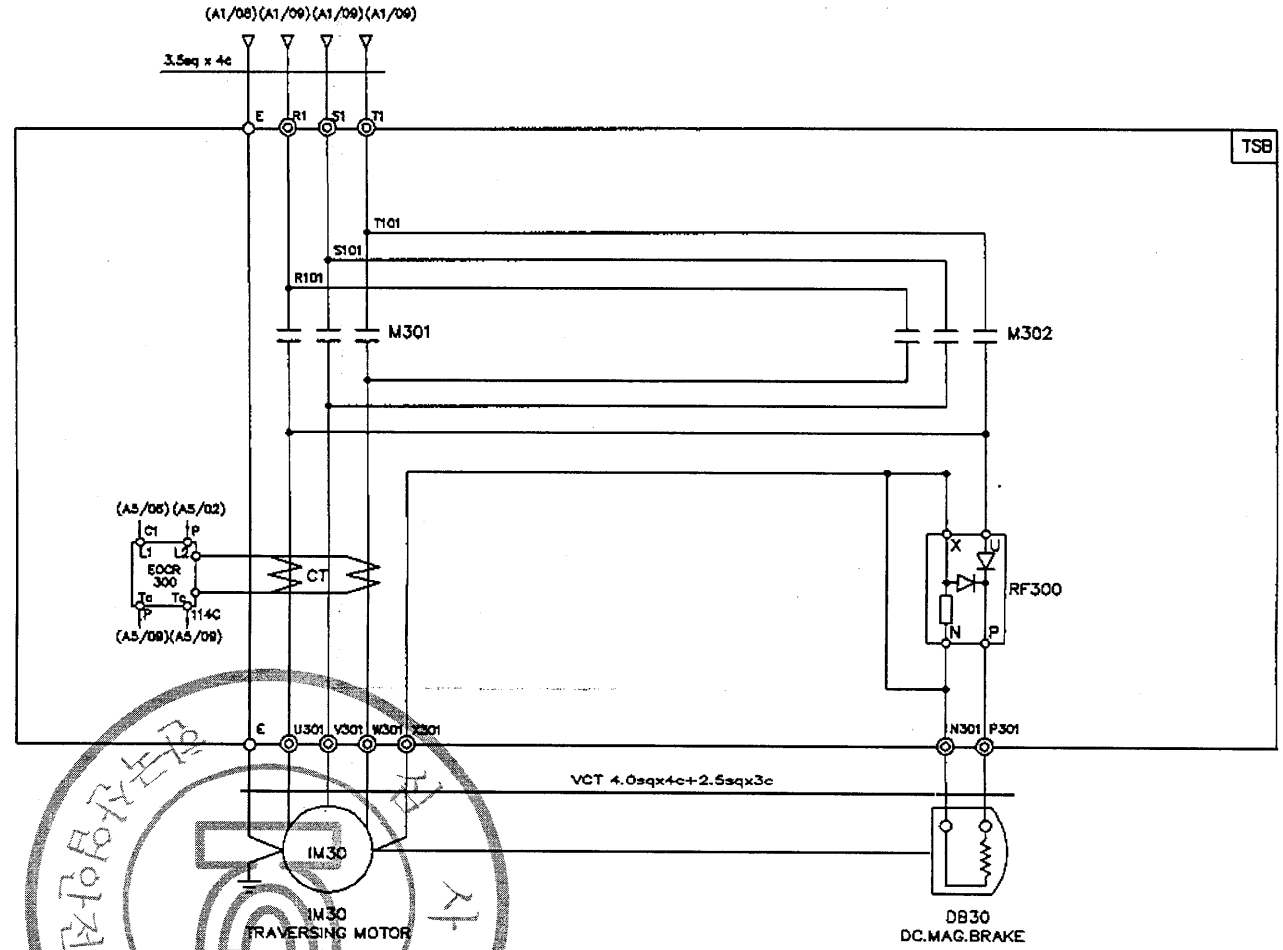

SPECIFICATION / SYMBOLS	TRAVERSING MOTOR	DC MAG' BRAKE	MAGNET CONTACTOR	SILICON RECTIFIER	ELECTRIC OVER CURRENT RELAY	LIMIT SWTCH
DESCRIPTION	IM 30	DB 30	M301 , M302	RF 300	EOCR 300	LS-301 , LS-302
	1.5KW x 4P AC 3PH 440V 60Hz	DC 100V	DOC-22P AC 110V	SR-30	SS-05	HY - W904
	1.0KW x 6P AC 3PH 440V 60Hz	DC 100V	DOC-22P AC 110V	SR-30	SS-05	HY - W904
SELECTION MAKER	KUKDONG		DAERYUK	ASECO		

MK	DATE	REVISIONS	CHK.	APP.
4				
3				
2				
1				

CUSTOMER		DRAWING	DESIGN	CHECKED	APPROVED	SCALE	DATE	ORDER NO.
DRAWING TITLE	TRAVERSING POWER CONTROL CIRCUIT DIAGRAM					NONE		
		KD 국동호이스트 주식회사 KUK DONG HOIST CO., LTD.				DWG. NO	KDC20E43	

산업재해예방
안전보건공단
KOREA OCCUPATIONAL SAFETY & HEALTH AGENCY
192.168.11.76 / 2013-12-17 15:49:47
불법복제 및 배포금지

1	2	3	4	5	6	7	8	9	10	11	12	13	14	15	16	17	18	19	20

POWER CIRCUIT

TRAVERSING MOTION

ADR'S NO. C2

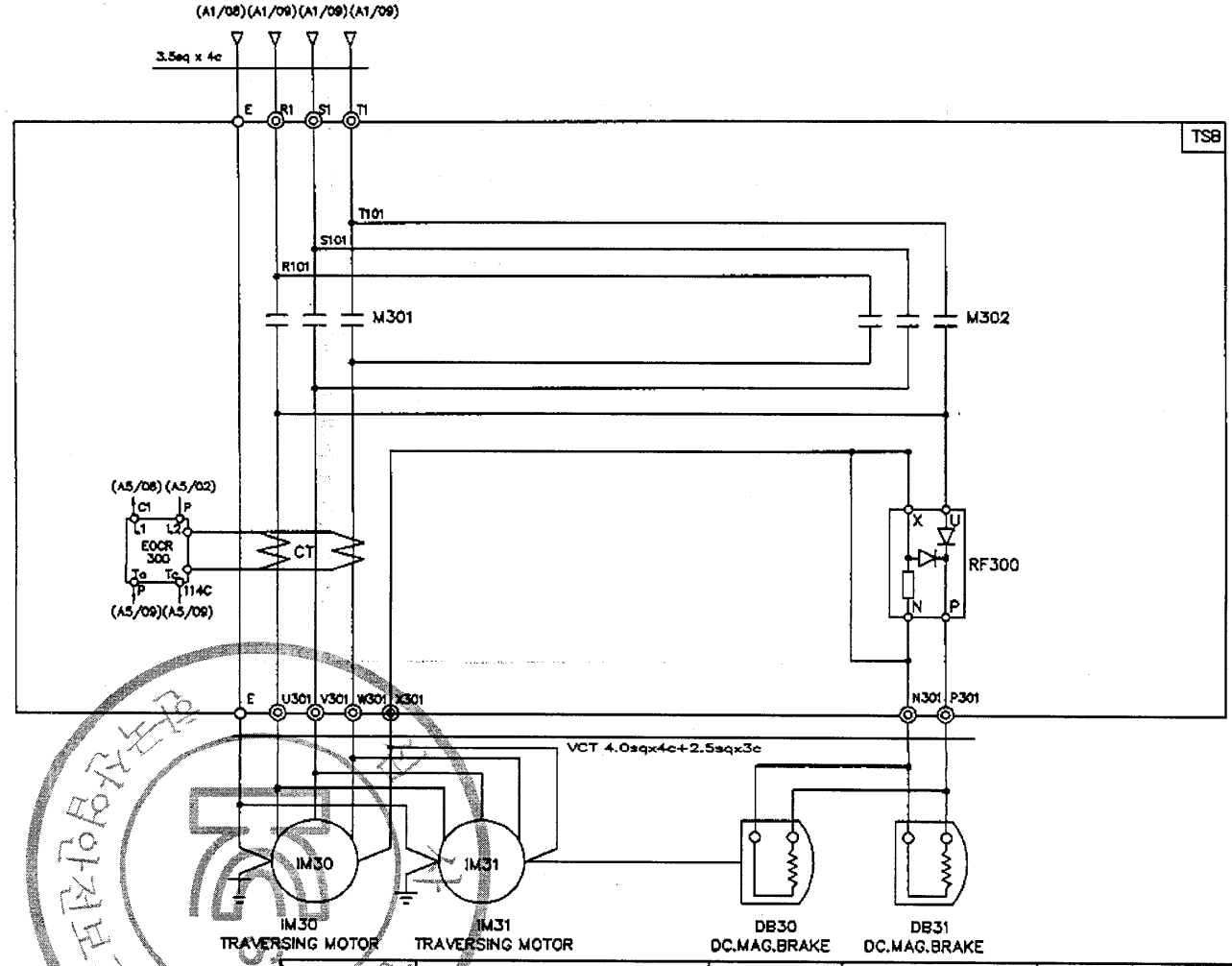

SPECIFICATION / SYMBOLS	TRAVERSING MOTOR	DC MAG' BRAKE	MAGNET CONTACTOR	SILICON RECTIFIER	ELECTRIC OVER CURRENT RELAY	LIMIT SWTCH
DESCRIPTION	IM 30 , 1M31	DB 30	M301 , M302	RF 300	EOCR 300	LS-301 , LS-302
	1.5KW x 4P AC 3PH 440V 60Hz	DC 100V	DOC-22P AC 110V	SR-30	SS-30	HY - W904
	1.0KW x 6P AC 3PH 440V 60Hz	DC 100V	DOC-22P AC 110V	SR-30	SS-30	HY - W904
SELECTION / MAKER	KUK DONG		DAERYUK	ASECO		

MK	DATE	REVISIONS	CHK.	APP.
4				
3				
2				
1				

CUSTOMER		DRAWING	DESIGN	CHECKED	APPROVED	SCALE	DATE	ORDER NO.
DRAWING TITLE	TRAVERSING POWER CONTROL CIRCUIT DIAGRAM					NONE		
		국동호이스트 주식회사 KUK DONG HOIST CO., LTD.				DWG. NO	KDC20E44	

사업재해예방
아시아 최고의 기업
KOREA OCCUPATIONAL SAFETY & HEALTH AGENCY
192.168.11.76 / 2013-12-17 15:49:47

1	2	3	4	5	6	7	8	9	10	11	12	13	14	15	16	17	18	19	20

POWER CIRCUIT

TRAVERSING MOTION

ADR'S NO. C2

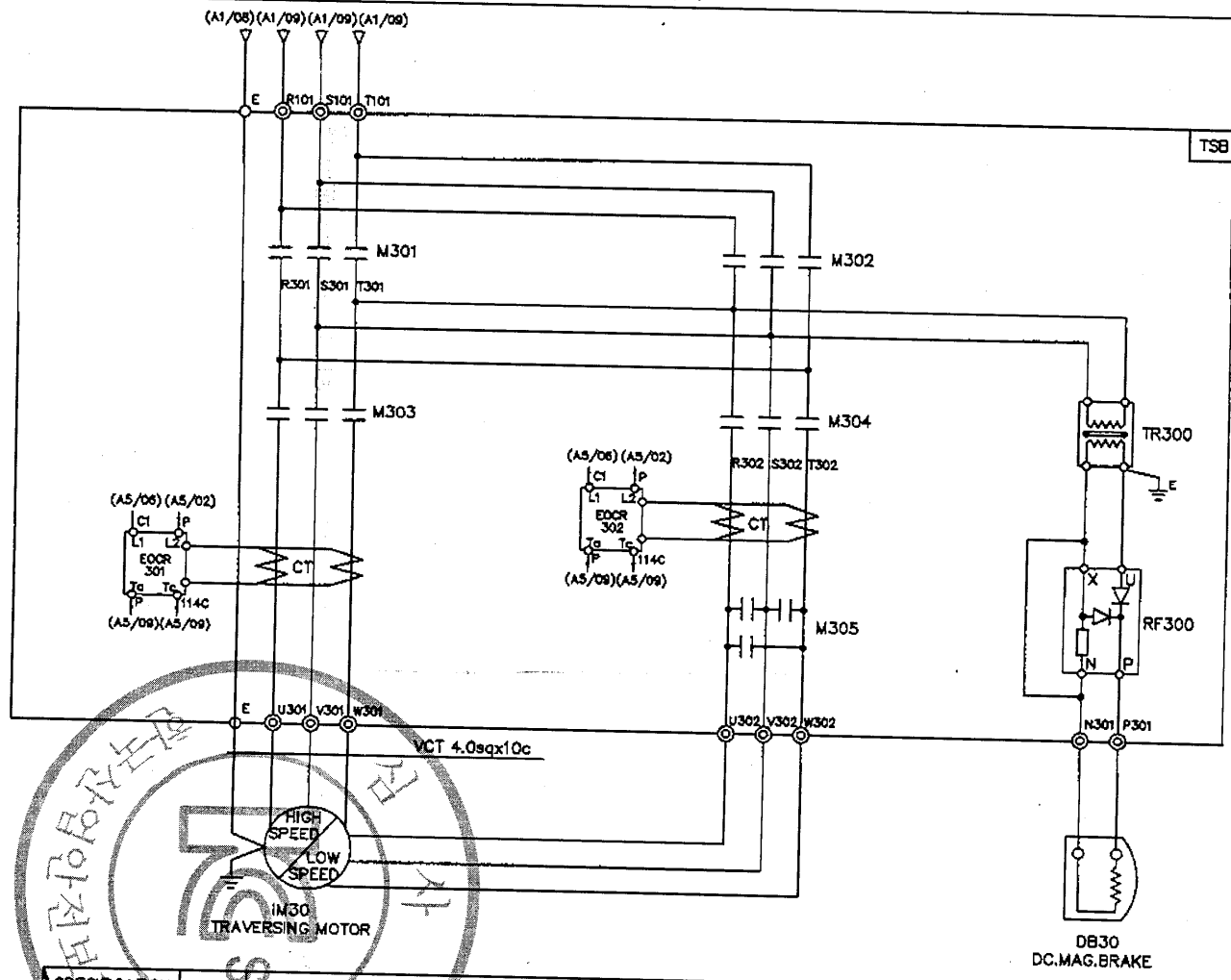

SPECIFICATION / SYMBOLS / DESCRIPTION		TRAVERSING MOTOR	DC MAG' BRAKE	MAGNET CONTACTOR		SILICON RECTIFIER	ELECTRIC OVER CURRENT RELAY	TRANSFORMER
		IM 30	DB30	M301 , M302 , M303	M304 , M305	RF 300	EOCR 301,302	TR300
	440V	1.5/0.75KWx6/12P AC3PH 440V 60Hz	DC 100V	DOC-22P	DOC-22R	SR-30	SS-05	AC440/220V, 300VA
	440V	1.0/0.5KWx4/8P AC3PH 440V 60Hz	DC 100V	DOC-22P	DOC-22R	SR-30	SS-05	AC440/220V, 300VA
SELECTION / MAKER		KUKDONG		DAERYUK		ASECO		SHINWHAN

MK	DATE	REVISIONS	CHK.	APP.
4				
3				
2				
1				

CUSTOMER		DRAWING	DESIGN	CHECKED	APPROVED	SCALE	DATE	ORDER NO.
DRAWING TITLE	TRAVERSING POWER CONTROL CIRCUIT DIAGRAM					NONE		
		극동호이스트 주식회사 KUK DONG HOIST CO., LTD.				DWG. NO	KDC20E45	

산업재해예방 안전보건공단 KOREA OCCUPATIONAL SAFETY & HEALTH AGENCY
192.168.11.76 / 2013-12-17 15:49:47
불법복제 및 배포금지

1	2	3	4	5	6	7	8	9	10	11	12	13	14	15	16	17	18	19	20

POWER CIRCUIT

TRAVERSING MOTION

ADR'S NO. C2

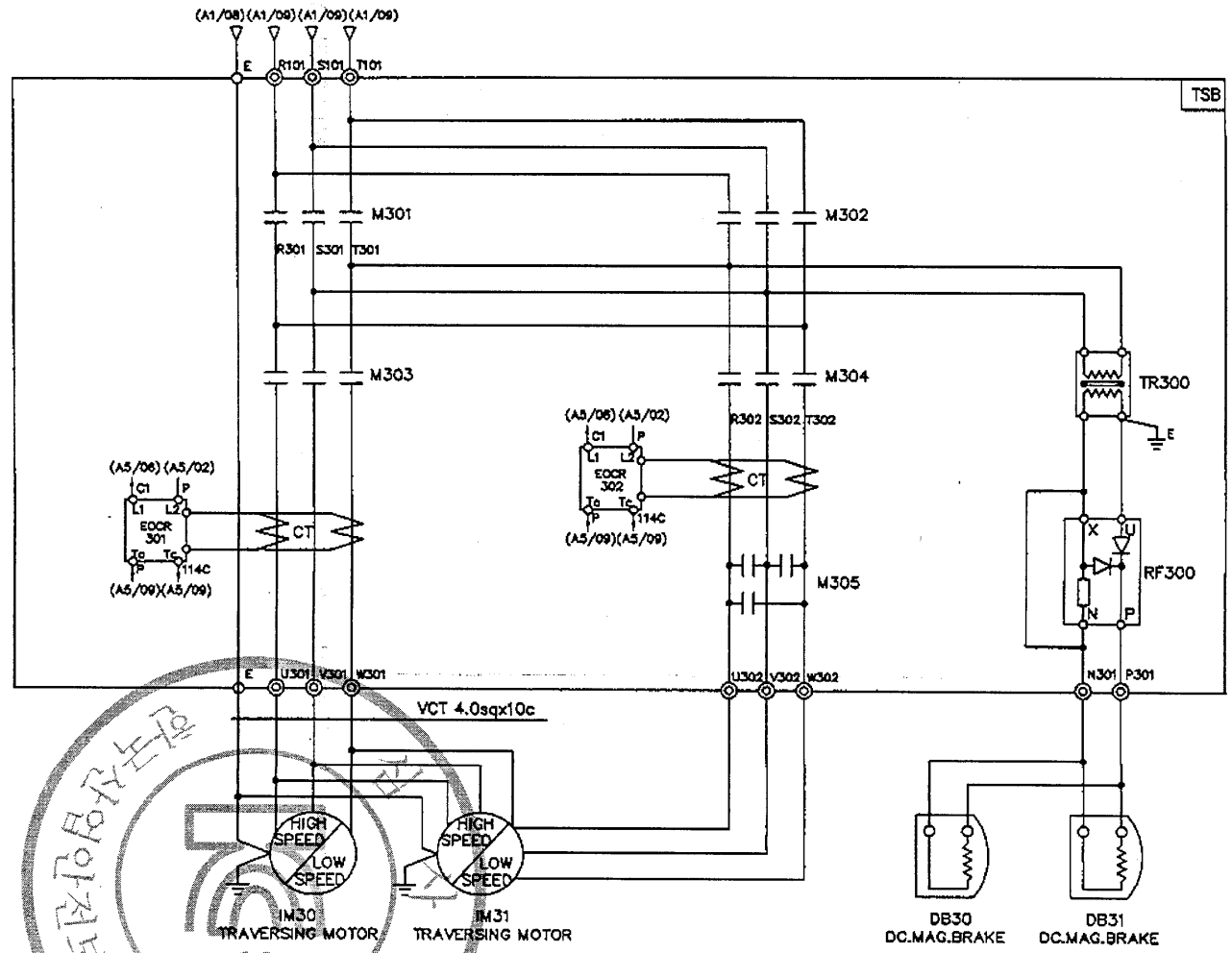

SPECIFICATION / SYMBOLS / DESCRIPTION		TRAVERSING MOTOR	DC MAG' BRAKE	MAGNET CONTACTOR		SILICON RECTIFIER	ELECTRIC OVER CURRENT RELAY	TRANSFORMER
		IM 30 , IM31	DB30 , DB31	M301 , M302 , M303	M304 , M305	RF 300	EOCR 301,302	TR300
	440V	1.5/0.75KWx6/12P AC3PH 440V 60Hz	DC 100V	DOC-22P	DOC-22R	SR-30	SS-30	AC440/220V, 300VA
	440V	1.0/0.5KWx4/8P AC3PH 440V 60Hz	DC 100V	DOC-22P	DOC-22R	SR-30	SS-30	AC440/220V, 300VA
SELECTION MAKER		KUKDONG		DAERYUK		ASECO		SHINWHAN

MK	DATE	REVISIONS	CHK.	APP.
4				
3				
2				
1				

CUSTOMER		DRAWING	DESIGN	CHECKED	APPROVED	SCALE	DATE	ORDER NO.
DRAWING TITLE	TRAVERSING POWER CONTROL CIRCUIT DIAGRAM					NONE		
		국동호이스트 주식회사 KUK DONG HOIST CO., LTD.				DWG. NO	KDC20E46	

산업재해예방
안전보건기술원
KOREA OCCUPATIONAL SAFETY & HEALTH AGENCY
192.168.11.76 / 2013-12-17 15:49:47

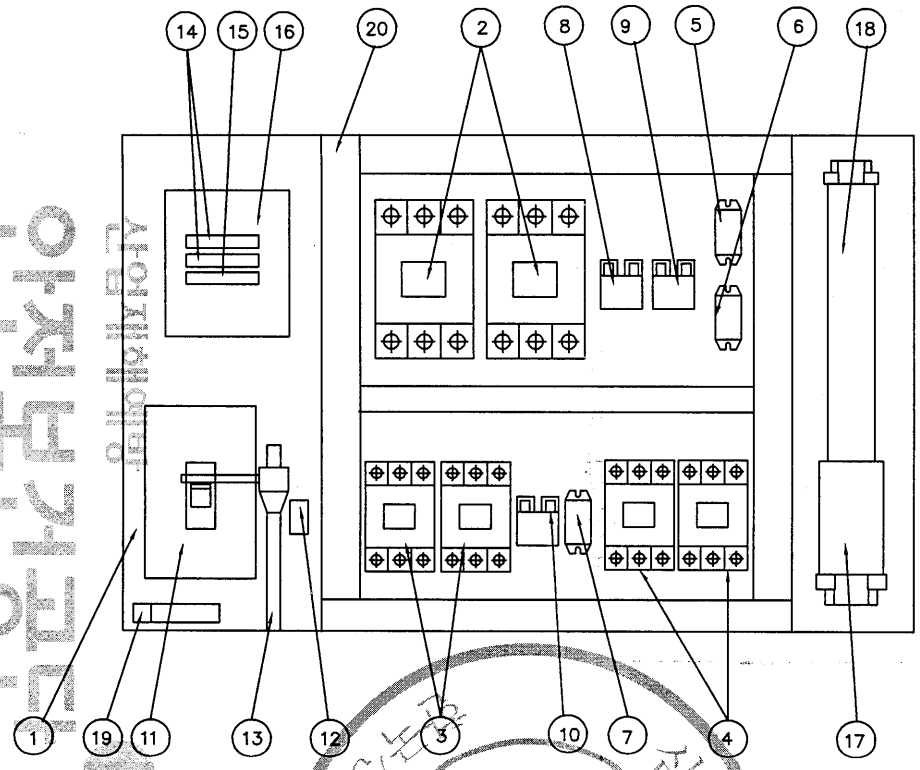

NO	DESCRIPTION	SPECIFICATION	Q'TY	REMARK
1	CHASSIS PLATE		1	아연도금
2	MAGNET CONTACT	MC-130a	2	HOISTING
3	MAGNET CONTACT	DMC22C	2	CREEP HOISTING
4	MAGNET CONTACT	DMC22C	2	TRAVERSING
5	SILICON RECTIFIER	SR-60	1	HOISTING
6	SILICON RECTIFIER	SR-30	1	CREEP HOISTING
7	SILICON RECTIFIER	SR-30	1	TRAVERSING
8	E.O.C.R	SS-60	1	HOISTING
9	E.O.C.R	SS-30	1	CREEP HOISTING
10	E.O.C.R	SS-05	1	TRAVERSING
11	N.F.B	125AF/60AT	1	LS-2
12	UPPER LIMIT	AC 600V/3A	1	LS-1
13	LIMIT LEVER	SS-400	1	
14	FUSE (F11,F12)	2 A	2	
15	FUSE (F13)	5 A	1	
16	TRANSFORMER	460V/110,120V, 200VA	1	
17	TERMINAL BLOCK	100A,25A		
18	TERMINAL BLOCK	15A		
19	EARTH TERMINAL	5tx25x50	1	
20	CABLE DUCT	-	1	
21	RELAY	4a4b	2	

NOTE

1. UPPER LIMIT LS-1? ?? ?? ?? ?? : AC 600V, 3A
2. UPPER LIMIT LS-2? ?? ?? ?? ??. : NFB 103AF
3. EARTH TERMINAL RESISTANCE : 0.018 Ω
4. POWER SOURCE : AC. 3ø 460V 60HZ

NOTE

1. 전선의 색상은 다음과 같다.
   1) 흑색 : 고류 및 직류 전원회로
   2) 적색 : 고류 제어회로
   3) 청색 : 직류 제어회로
   4) 주황색 : 외부 연동장치 제어회로
   5) 녹색 또는 녹색과 황색 조합 : 접지
   6) 청색 : 중성선
2. CABLE MATERIAL : KIV OR EQUIVALENT
   MIN SIZE : 2.5sq
3. 제어용 전선 : 2.5mm KIV,HIV
4. 제작시 다소 변경 될수있음.
5. 외함 개방구조는 다음과 같을것.
   1) 외함 개방시 충전부분이 차단되도록 할것.
   2) 외함 개방후 충전되어있는 부분은 IP2X 이상의 직접 접촉 방호가 되어있을것.

MK	DATE	REVISIONS	CHK.	APP.
4				
3				
2				
1				

CUSTOMER		DRAWING	DESIGN	CHECKED	APPROVED	SCALE	DATE	ORDER NO.
DRAWING TITLE	HOISTING CONTROL BOX(CRANE)					NONE		
	ARRANGEMENT DRAWING	극동호이스트 주식회사 KUK DONG HOIST CO., LTD.				DWG. NO	KDC15BA52	

192.168.11.76 / 2013-12-17 15:49:47
KOREA OCCUPATIONAL SAFETY & HEALTH AGENCY
한국산업안전보건공단
LEE HAN HOO
이한호
본 서식은 배포용 입니다

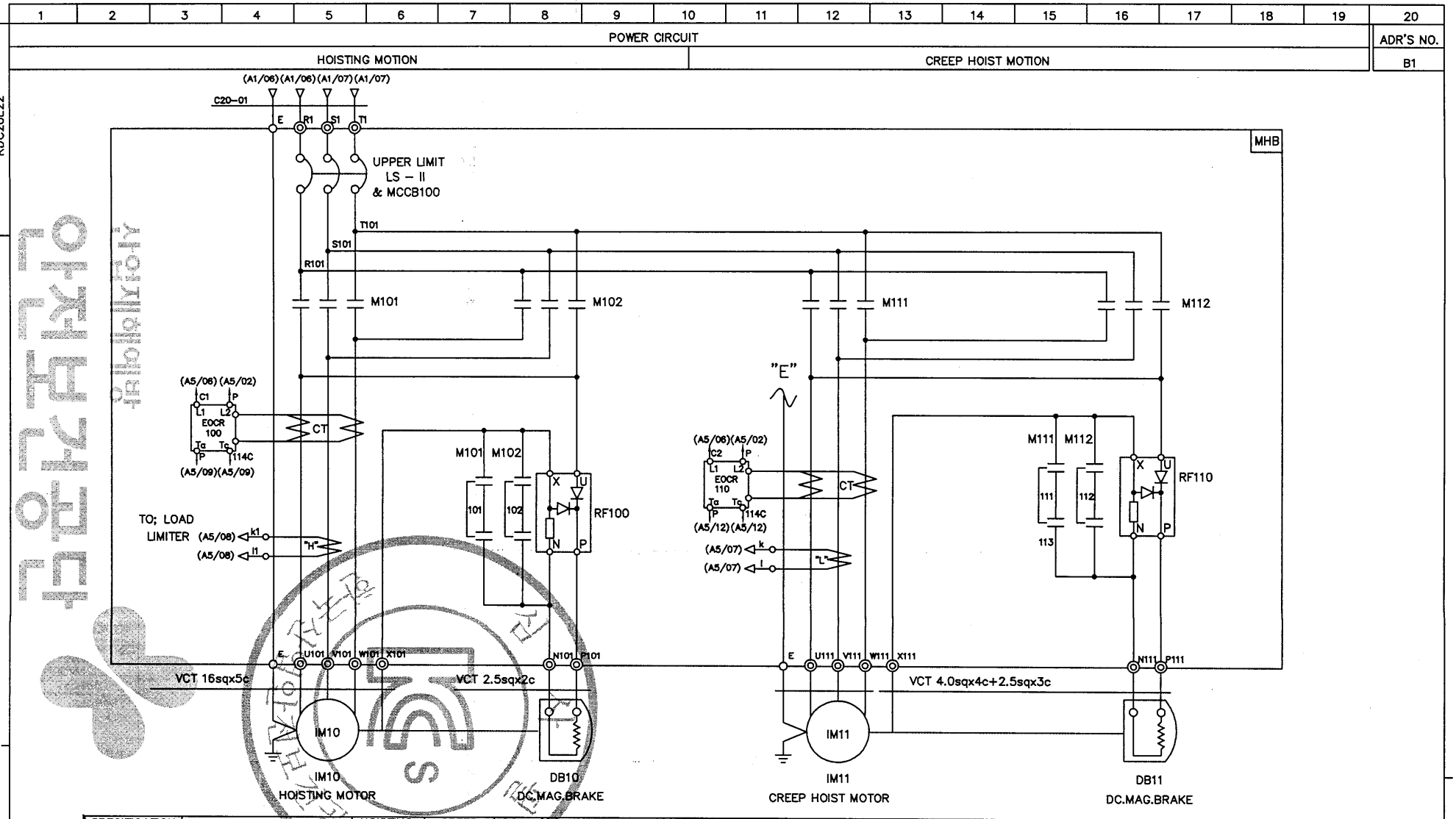

SPECIFICATION / SYMBOLS	HOISTING POWER	HOISTING MOTOR	CREEP MOTOR	DC.MAG BRAKE	NO FUSE BREAKER	TRANSFORMER	FUSE		MAGNET CONTACTOR		UPPER LIMIT	ELECTRIC OVER CURRENT RELAY		SILICON RECTIFIER		LOAD LIMITER	CABLE
DESCRIPTION	HOIST	IM 10	IM 11	DB10, 11	LS-II & MCCB100	TR 1	F11,F12	F13	M101,M102	M111,M112	LS-I, LS-II	EOCR100	EOCR110	RF100	RF110	LOAD LIMITER	C20-01
	20TON AC3PH 460V 60Hz	17KWx8P	1.8KWx8P	DC 100V	ABS-103AF/60AT	460/110V,120V,200VA	2A	5A	MC-130a	DMC-22C	AC 600V 3A	SS-60	SS-30	SR-60	SR-30	JDL-100	VCT 25sqx4c
SELECTION MAKER	KUKDONG				LS	SHINHAN	–		LS	DONGA	KUK DONG	ASECO				JUNGHO	DONGIL

MK	DATE	REVISIONS	CHK.	APP.
4				
3				
2				
1				

CUSTOMER		DRAWING	DESIGN	CHECKED	APPROVED	SCALE	DATE	ORDER NO.
DRAWING TITLE	CREEP HOISTING POWER & CONTROL CIRCUIT DIAGRAM					NONE		
		극동호이스트 주식회사 KUK DONG HOIST CO., LTD.				DWG. NO	KDC20E52	

사진제한없음
한국산업안전보건공단
KOREA OCCUPATIONAL SAFETY & HEALTH AGENCY
192.168.11.76 / 2013-12-17 15:49:47
사용금지 및 배포금지

1	2	3	4	5	6	7	8	9	10	11	12	13	14	15	16	17	18	19	20

POWER CIRCUIT — ADR'S NO.

TRAVERSING MOTION — C1

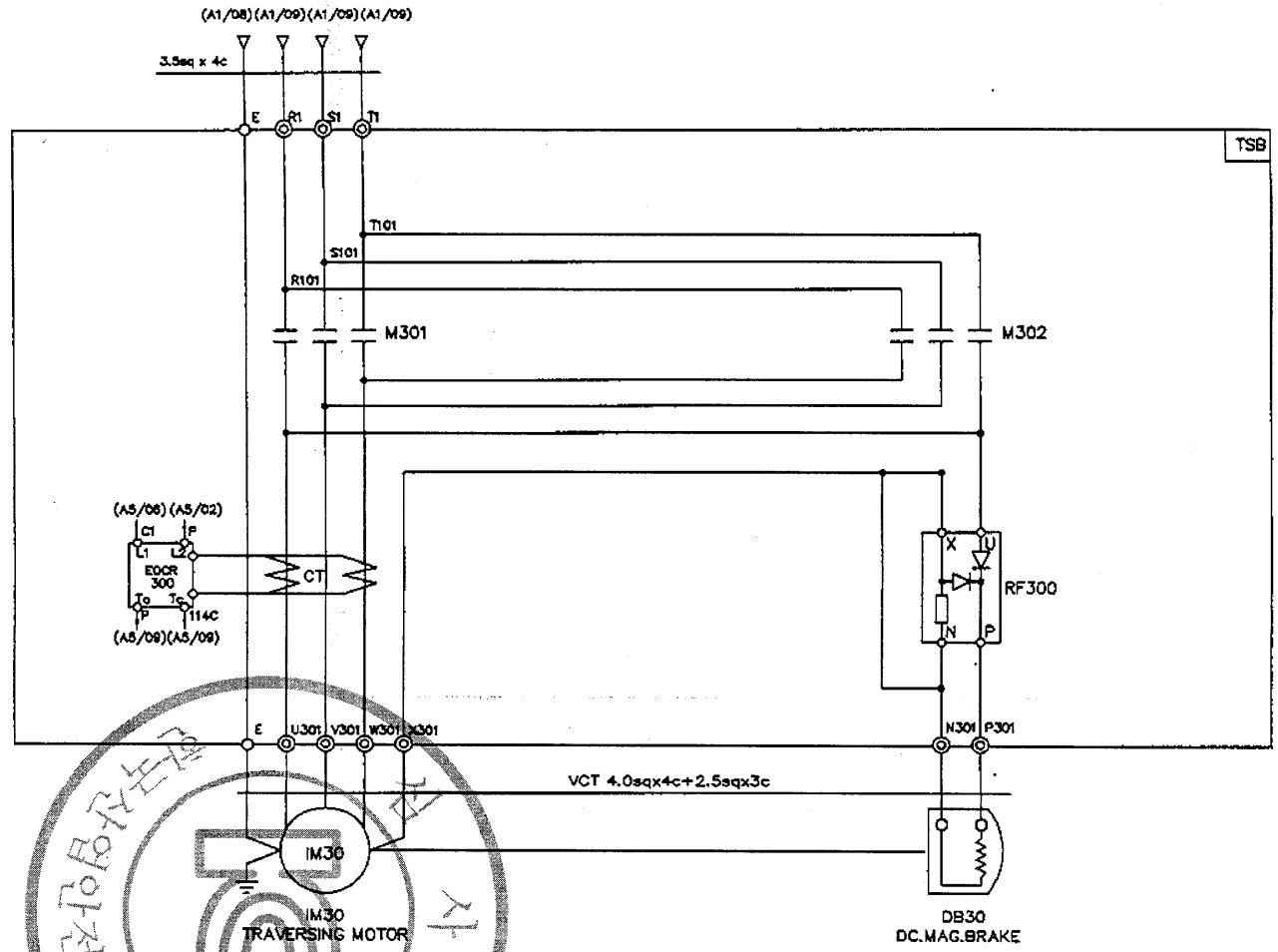

SPECIFICATION / SYMBOLS	TRAVERSING MOTOR	DC MAG' BRAKE	MAGNET CONTACTOR	SILICON RECTIFIER	ELECTRIC OVER CURRENT RELAY	LIMIT SWTCH
DESCRIPTION	IM 30	DB 30	M301 , M302	RF 300	EOCR 300	LS-301 , LS-302
	1.5KW x 4P AC 3PH 460V 60Hz	DC 100V	DOC-22P AC 110V	SR-30	SS-05	HY - W904
	1.0KW x 6P AC 3PH 460V 60Hz	DC 100V	DOC-22P AC 110V	SR-30	SS-05	HY - W904
SELECTION MAKER	KUKDONG		DAERYUK	ASECO		

MK	DATE	REVISIONS	CHK.	APP.
4				
3				
2				
1				

CUSTOMER		DRAWING	DESIGN	CHECKED	APPROVED	SCALE	DATE	ORDER NO.
DRAWING TITLE	TRAVERSING POWER CONTROL CIRCUIT					NONE		
	DIAGRAM	KD 국동호이스트 주식회사 KUK DONG HOIST CO., LTD.				DWG. NO	KDC20E53	

한국산업안전보건공단 KOREA OCCUPATIONAL SAFETY & HEALTH AGENCY
산업재해예방
192.168.11.76 / 2013-12-17 15:49:47

1	2	3	4	5	6	7	8	9	10	11	12	13	14	15	16	17	18	19	20

POWER CIRCUIT

TRAVERSING MOTION

ADR'S NO. C2

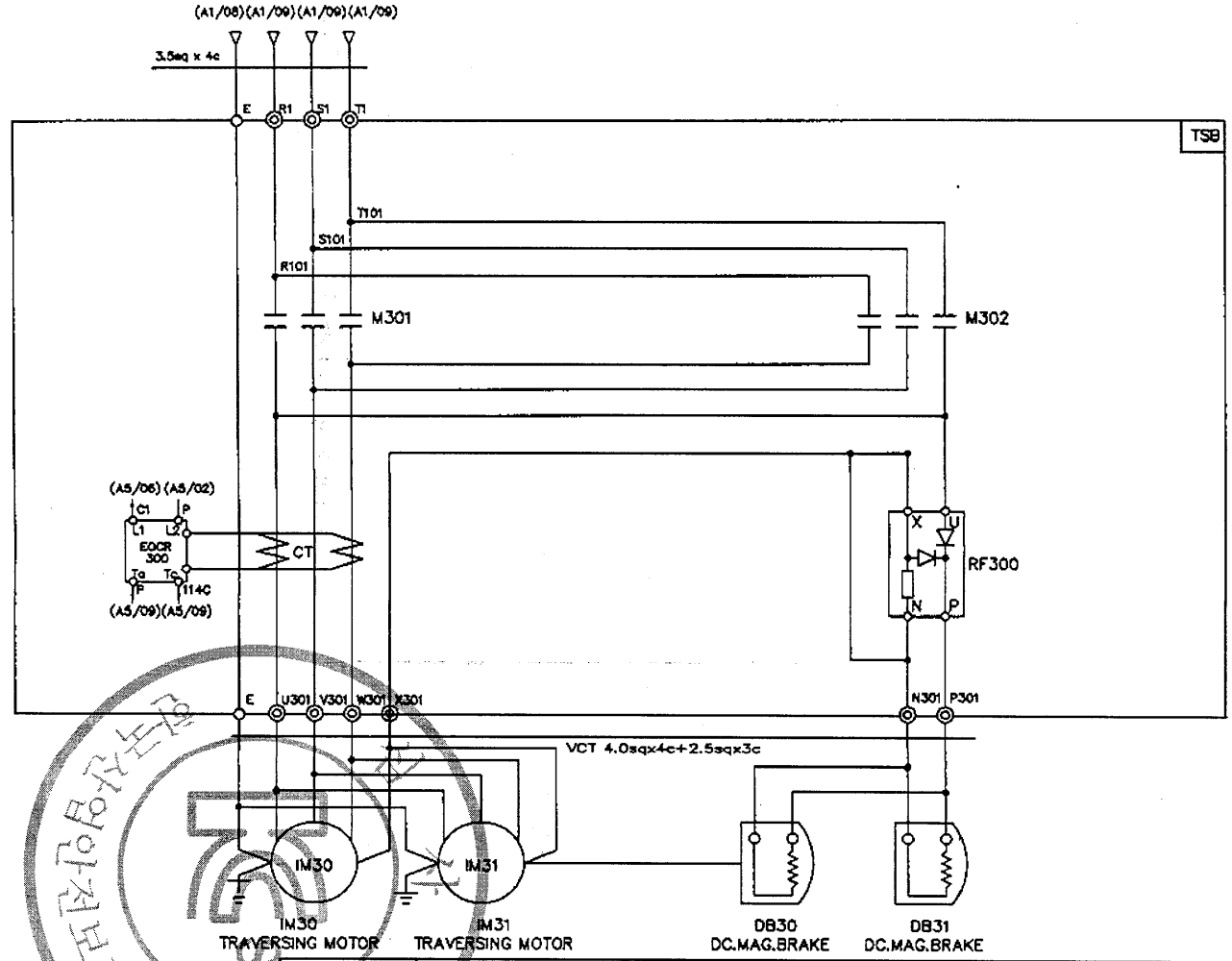

SPECIFICATION / SYMBOLS	TRAVERSING MOTOR	DC MAG' BRAKE	MAGNET CONTACTOR	SILICON RECTIFIER	ELECTRIC OVER CURRENT RELAY	LIMIT SWTCH
DESCRIPTION	IM 30 , 1M31	DB 30	M301 , M302	RF 300	EOCR 300	LS-301 , LS-302
	1.5KW x 4P AC 3PH 460V 60Hz	DC 100V	DOC-22P AC 110V	SR-30	SS-30	HY - W904
	1.0KW x 6P AC 3PH 460V 60Hz	DC 100V	DOC-22P AC 110V	SR-30	SS-30	HY - W904
SELECTION MAKER	KUK DONG		DAERYUK	ASECO		

MK	DATE	REVISIONS	CHK.	APP.
4				
3				
2				
1				

CUSTOMER		DRAWING	DESIGN	CHECKED	APPROVED	SCALE	DATE	ORDER NO.
DRAWING TITLE	TRAVERSING POWER CONTROL CIRCUIT DIAGRAM					NONE		
		KD 국동호이스트 주식회사 KUK DONG HOIST CO., LTD.				DWG. NO	KDC20E54	

한국산업안전보건공단
KOREA OCCUPATIONAL SAFETY & HEALTH AGENCY
192.168.11.76 / 2013-12-17 15:49:47
불법복제 및 배포금지

1	2	3	4	5	6	7	8	9	10	11	12	13	14	15	16	17	18	19	20

POWER CIRCUIT — ADR'S NO.

TRAVERSING MOTION — C2

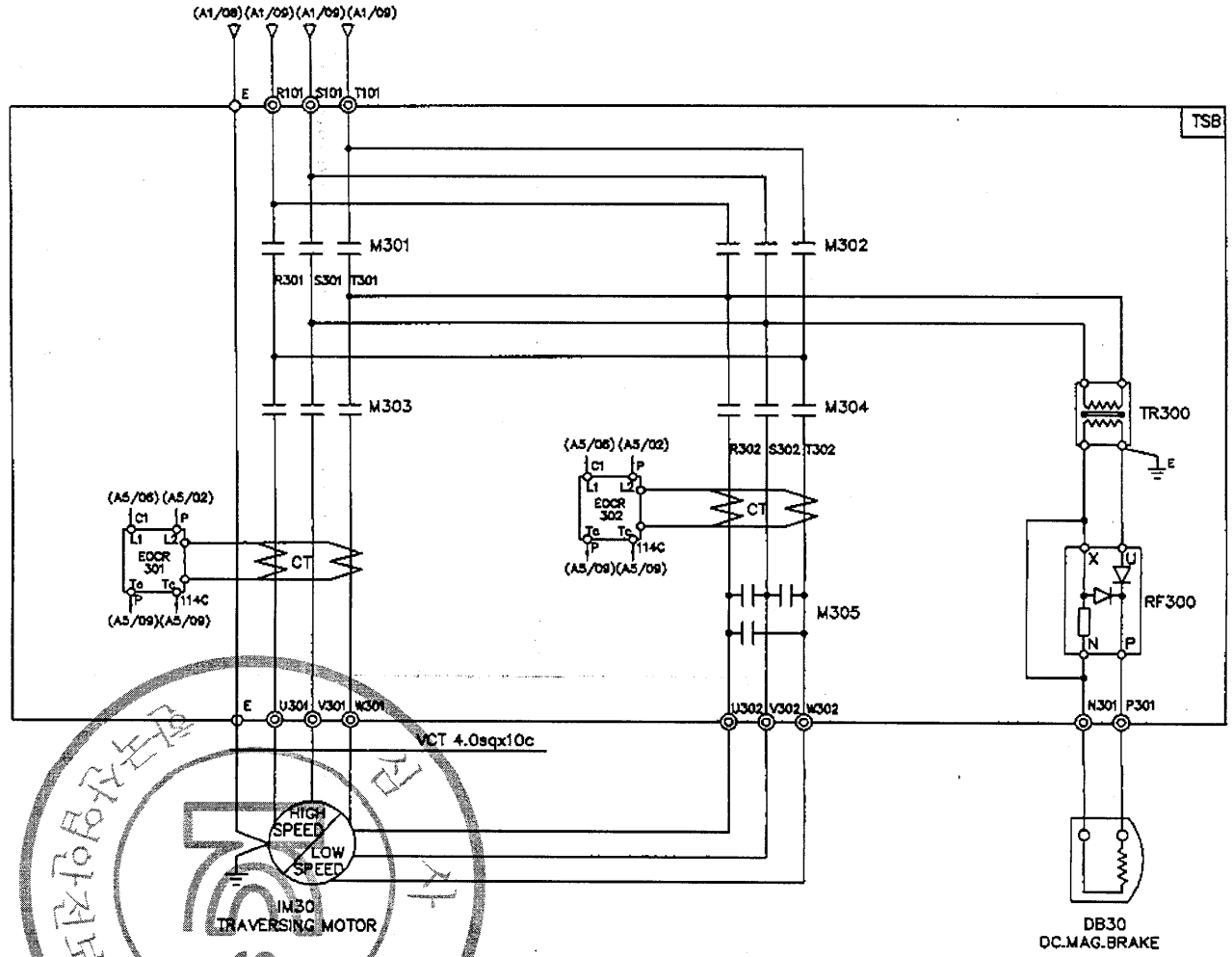

SPECIFICATION / SYMBOLS / DESCRIPTION		TRAVERSING MOTOR	DC MAG' BRAKE	MAGNET CONTACTOR		SILICON RECTIFIER	ELECTRIC OVER CURRENT RELAY	TRANSFORMER
		IM 30	DB30	M301 , M302 , M303	M304 , M305	RF 300	EOCR 301,302	TR300
	460V	1.5/0.75KWx6/12P AC3PH 460V 60Hz	DC 100V	DOC-22P	DOC-22R	SR-30	SS-05	AC460/220V, 300VA
	460V	1.0/0.5KWx4/8P AC3PH 460V 60Hz	DC 100V	DOC-22P	DOC-22R	SR-30	SS-05	AC460/220V, 300VA
SELECTION MAKER		KUKDONG		DAERYUK		ASECO		SHINHAN

MK	DATE	REVISIONS	CHK.	APP.
4				
3				
2				
1				

CUSTOMER		DRAWING	DESIGN	CHECKED	APPROVED	SCALE	DATE	ORDER NO.
DRAWING TITLE	TRAVERSING POWER CONTROL CIRCUIT					NONE		
	DIAGRAM	KD 국동호이스트 주식회사 KUK DONG HOIST CO., LTD.				DWG. NO	KDC20E55	

산업재해예방
아주대학교 산업안전보건센터
KOREA OCCUPATIONAL SAFETY & HEALTH AGENCY
192.168.11.76 / 2013-12-17 15:49:47
불법복제 및 배포금지

1	2	3	4	5	6	7	8	9	10	11	12	13	14	15	16	17	18	19	20

POWER CIRCUIT

TRAVERSING MOTION

ADR'S NO. C2

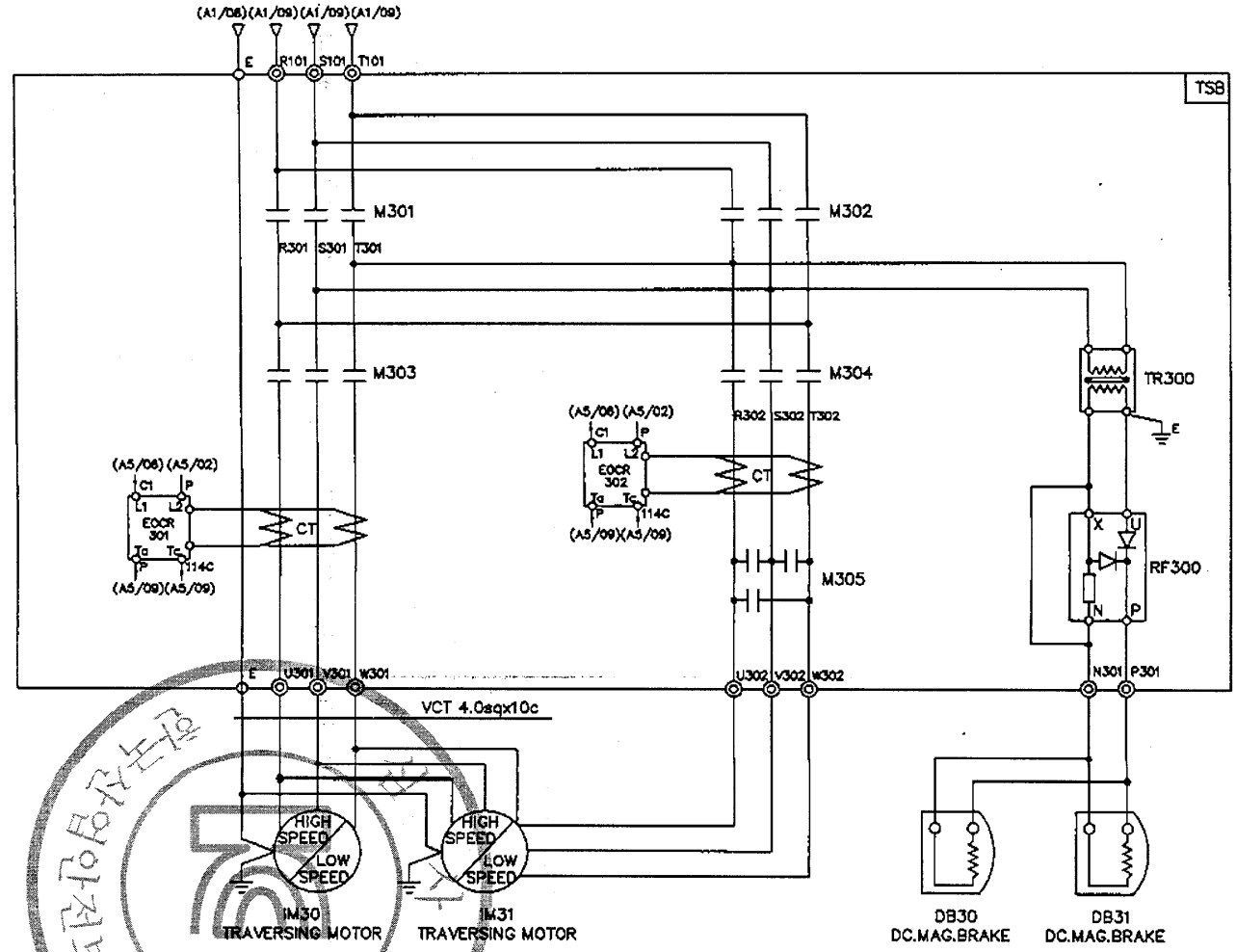

SPECIFICATION / SYMBOLS / DESCRIPTION		TRAVERSING MOTOR	DC MAG' BRAKE	MAGNET CONTACTOR		SILICON RECTIFIER	ELECTRIC OVER CURRENT RELAY	TRANSFORMER
		IM 30 , IM31	DB30 , DB31	M301 , M302 , M303	M304 , M305	RF 300	EOCR 301,302	TR300
	460V	1.5/0.75KWx6/12P AC3PH 460V 60Hz	DC 100V	DOC-22P	DOC-22R	SR-30	SS-30	AC460/220V, 300VA
	460V	1.0/0.5KWx4/8P AC3PH 460V 60Hz	DC 100V	DOC-22P	DOC-22R	SR-30	SS-30	AC460/220V, 300VA
SELECTION MAKER		KUKDONG		DAERYUK		ASECO		SHINHAN

MK	DATE	REVISIONS	CHK.	APP.
4				
3				
2				
1				

CUSTOMER		DRAWING	DESIGN	CHECKED	APPROVED	SCALE	DATE	ORDER NO.
DRAWING TITLE	TRAVERSING POWER CONTROL CIRCUIT DIAGRAM					NONE		
		국동호이스트 주식회사 KUK DONG HOIST CO., LTD.				DWG. NO	KDC20E56	

산업재해예방 산업안전보건공단
KOREA OCCUPATIONAL SAFETY & HEALTH AGENCY
192.168.11.76 / 2013-12-17 15:49:47

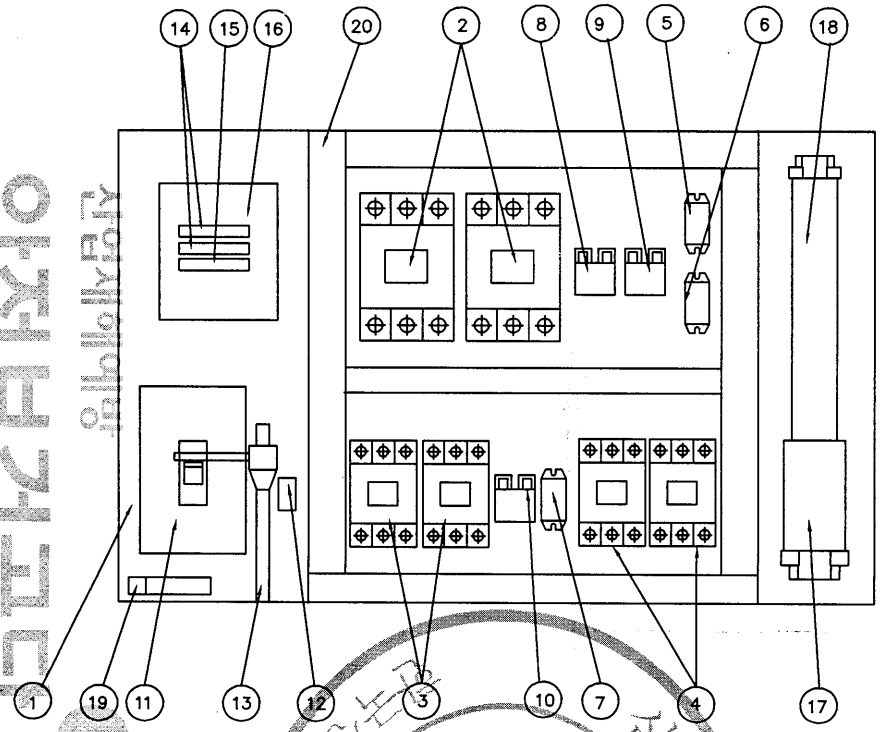

NO	DESCRIPTION	SPECIFICATION	Q'TY	REMARK
1	CHASSIS PLATE		1	아연도금
2	MAGNET CONTACT	MC-130a	2	HOISTING
3	MAGNET CONTACT	DMC22C	2	CREEP HOISTING
4	MAGNET CONTACT	DMC22C	2	TRAVERSING
5	SILICON RECTIFIER	SR-60	1	HOISTING
6	SILICON RECTIFIER	SR-30	1	CREEP HOISTING
7	SILICON RECTIFIER	SR-30	1	TRAVERSING
8	E.O.C.R	SS-60	1	HOISTING
9	E.O.C.R	SS-30	1	CREEP HOISTING
10	E.O.C.R	SS-05	1	TRAVERSING
11	N.F.B	125AF/60AT	1	LS-2
12	UPPER LIMIT	AC 600V/3A	1	LS-1
13	LIMIT LEVER	SS-400	1	
14	FUSE (F11,F12)	2 A	2	
15	FUSE (F13)	5 A	1	
16	TRANSFORMER	480V/110,120V, 200VA	1	
17	TERMINAL BLOCK	100A,25A		
18	TERMINAL BLOCK	15A		
19	EARTH TERMINAL	5tx25x50	1	
20	CABLE DUCT	–	1	
21	RELAY	4a4b	2	

NOTE

1. UPPER LIMIT LS-1의 접점 허용 전류 용량 : AC 600V, 3A
2. UPPER LIMIT LS-2의 접점 허용 전류 용량 : NFB 103AF
3. EARTH TERMINAL RESISTANCE : 0.018 Ω
4. POWER SOURCE : AC. 3ø 480V 60HZ

NOTE

1. 전선의 색상은 다음과 같다.
   1) 흑색 : 교류 및 직류 전원회로
   2) 적색 : 교류 제어회로
   3) 청색 : 직류 제어회로
   4) 주황색 : 외부 연동장치 제어회로
   5) 녹색 또는 녹색과 황색 조합 : 접지
   6) 청색 : 중성선
2. CABLE MATERIAL : KIV OR EQUIVALENT
   MIN SIZE : 2.5sq
3. 제어용 전선 : 2.5mm KIV,HIV
4. 제작시 다소 변경 될수있음.
5. 외함 개방구조는 다음과 같을것.
   1) 외함 개방시 충전부분이 차단되도록 할것.
   2) 외함 개방후 충전되어있는 부분은 IP2X 이상의 직접 접촉 방호가 되어있을것.

MK	DATE	REVISIONS	CHK.	APP.
4				
3				
2				
1				

CUSTOMER		DRAWING	DESIGN	CHECKED	APPROVED	SCALE	DATE	ORDER NO.
DRAWING TITLE	HOISTING CONTROL BOX(CRANE)					NONE		
	ARRANGEMENT DRAWING	극동호이스트 주식회사 KUK DONG HOIST CO., LTD.				DWG. NO	KDC20BA62	

불법복제 및 배포금지
192.168.11.76 / 2013-12-17 15:49:47
KOREA OCCUPATIONAL SAFETY & HEALTH AGENCY

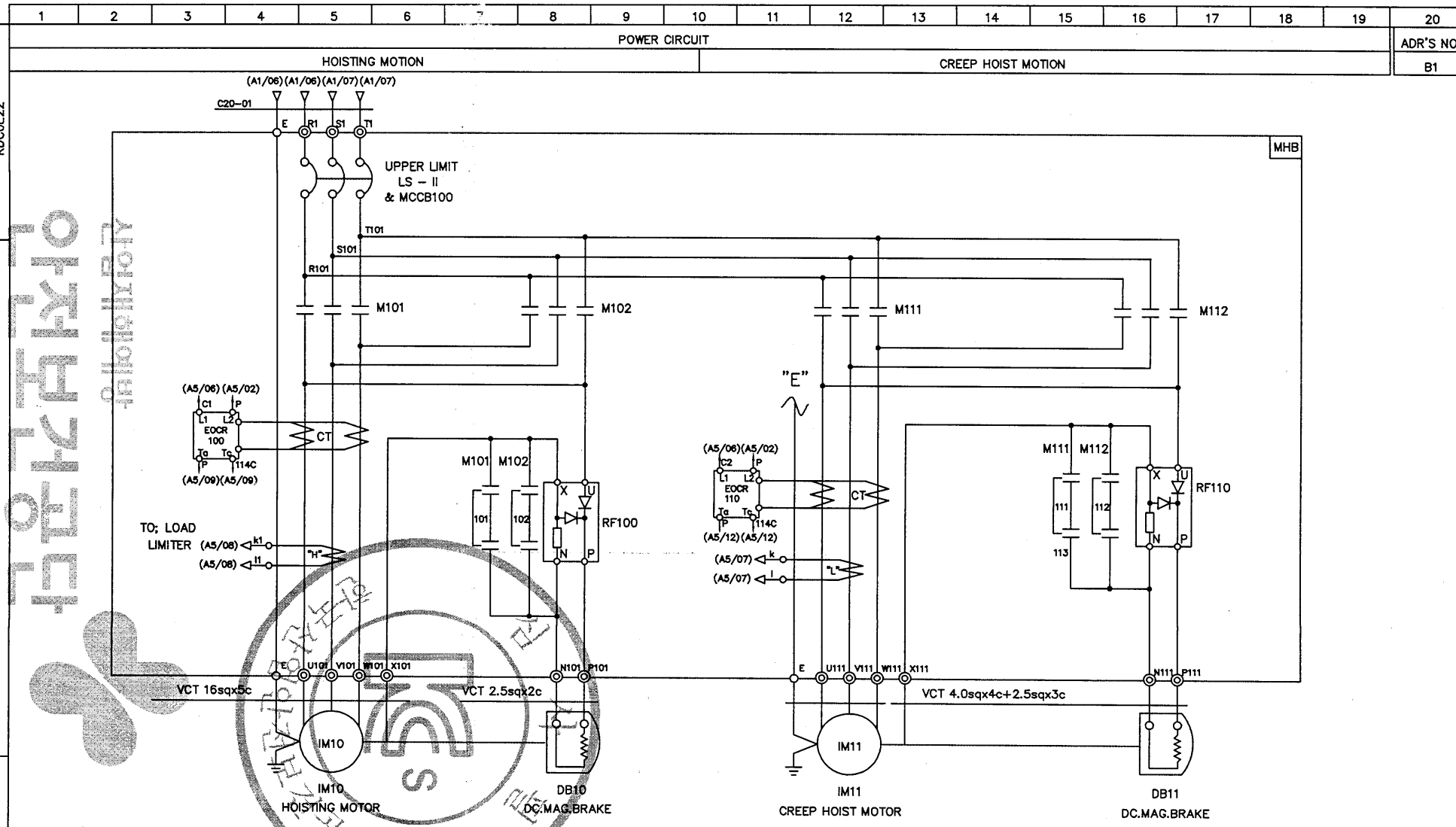

SPECIFICATION / SYMBOLS	HOISTING POWER	HOISTING MOTOR	CREEP MOTOR	DC.MAG BRAKE	NO FUSE BREAKER	TRANSFORMER	FUSE		MAGNET CONTACTOR		UPPER LIMIT	ELECTRIC OVER CURRENT RELAY		SILICON RECTIFIER		LOAD LIMITER	CABLE
DESCRIPTION	HOIST	IM 10	IM 11	DB10, 11	LS-II & MCCB100	TR 1	F11,F12	F13	M101,M102	M111,M112	LS-I, LS-II	EOCR100	EOCR110	RF100	RF110	LOAD LIMITER	C20-01
	20TON AC3PH 480V 60Hz	17KWx8P	1.8KWx8P	DC 100V	ABS-103AF/60AT	480/110V,120V,200VA	2A	5A	MC-130a	DMC-22C	AC 600V 3A	SS-60	SS-30	SR-60	SR-30	JDL-100	VCT 25sqx4c
SELECTION / MAKER	KUKDONG				LS	SHINHAN	-		LS	DONGA	KUK DONG	ASECO				JUNGHO	DONGIL

MK	DATE	REVISIONS	CHK.	APP.
4				
3				
2				
1				

CUSTOMER		DRAWING	DESIGN	CHECKED	APPROVED	SCALE	DATE	ORDER NO.
DRAWING TITLE	CREEP HOISTING POWER & CONTROL CIRCUIT DIAGRAM					NONE		
		극동호이스트 주식회사 KUK DONG HOIST CO., LTD.				DWG. NO	KDC20E62	

불법복제 및 배포금지
192.168.11.76 / 2013-12-17 15:49:47
한국산업안전보건공단 KOREA OCCUPATIONAL SAFETY & HEALTH AGENCY

1	2	3	4	5	6	7	8	9	10	11	12	13	14	15	16	17	18	19	20

POWER CIRCUIT

TRAVERSING MOTION

ADR'S NO. C1

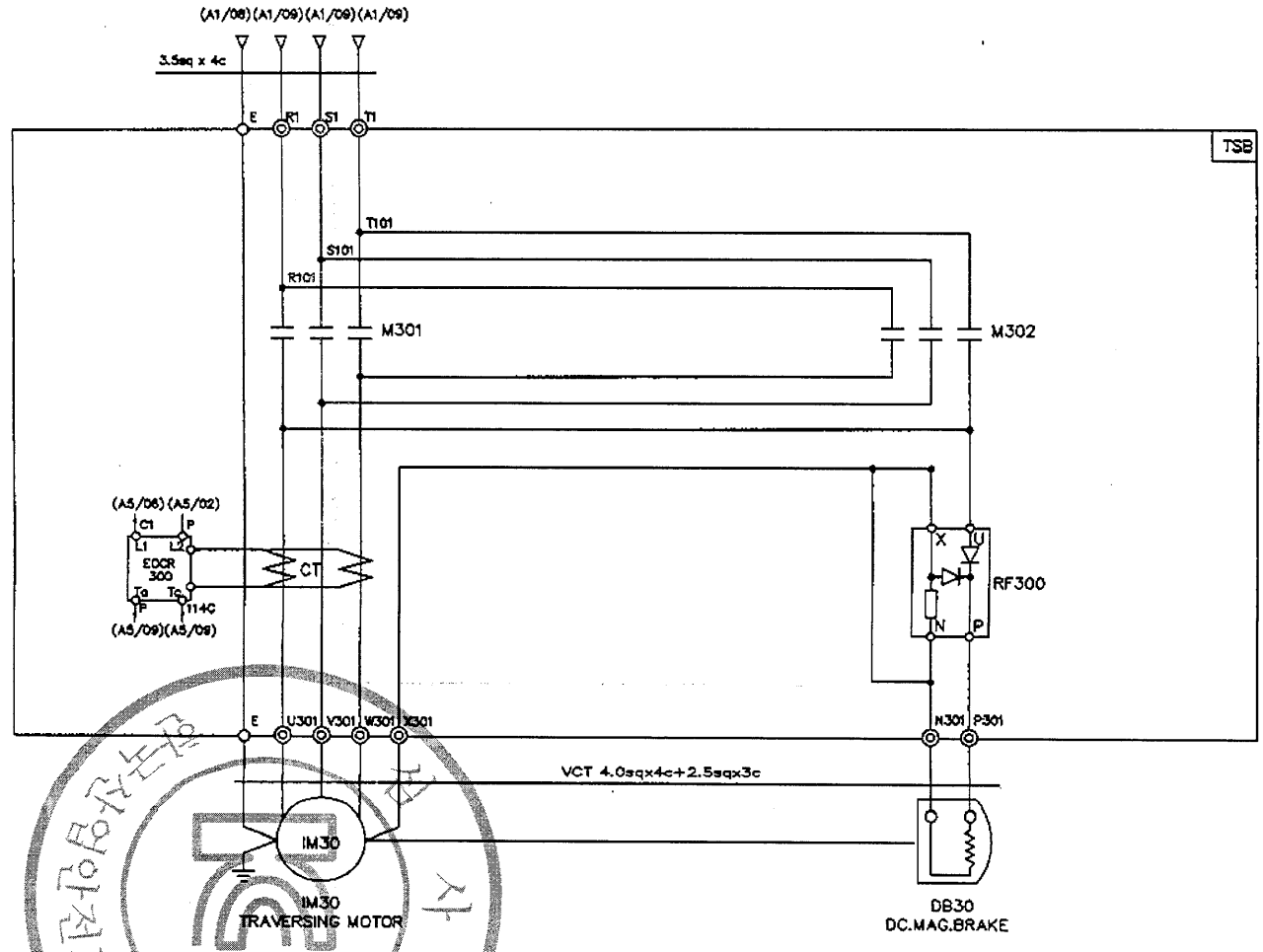

SPECIFICATION / SYMBOLS	TRAVERSING MOTOR	DC MAG' BRAKE	MAGNET CONTACTOR	SILICON RECTIFIER	ELECTRIC OVER CURRENT RELAY	LIMIT SWTCH
DESCRIPTION	IM 30	DB 30	M301 , M302	RF 300	EOCR 300	LS-301 , LS-302
	1.5KW x 4P AC 3PH 480V 60Hz	DC 100V	DOC-22P AC 110V	SR-30	SS-05	HY - W904
	1.0KW x 6P AC 3PH 480V 60Hz	DC 100V	DOC-22P AC 110V	SR-30	SS-05	HY - W904
SELECTION / MAKER	KUKDONG		DAERYUK	ASECO		

MK	DATE	REVISIONS	CHK.	APP.
4				
3				
2				
1				

CUSTOMER		DRAWING	DESIGN	CHECKED	APPROVED	SCALE	DATE	ORDER NO.
DRAWING TITLE	TRAVERSING POWER CONTROL CIRCUIT DIAGRAM					NONE		
		KD 국동호이스트 주식회사 KUK DONG HOIST CO., LTD.				DWG. NO	KDC20E63	

한국산업안전보건공단
KOREA OCCUPATIONAL SAFETY & HEALTH AGENCY
192.168.11.76 / 2013-12-17 15:49:47

1	2	3	4	5	6	7	8	9	10	11	12	13	14	15	16	17	18	19	20

POWER CIRCUIT

TRAVERSING MOTION

ADR'S NO. C2

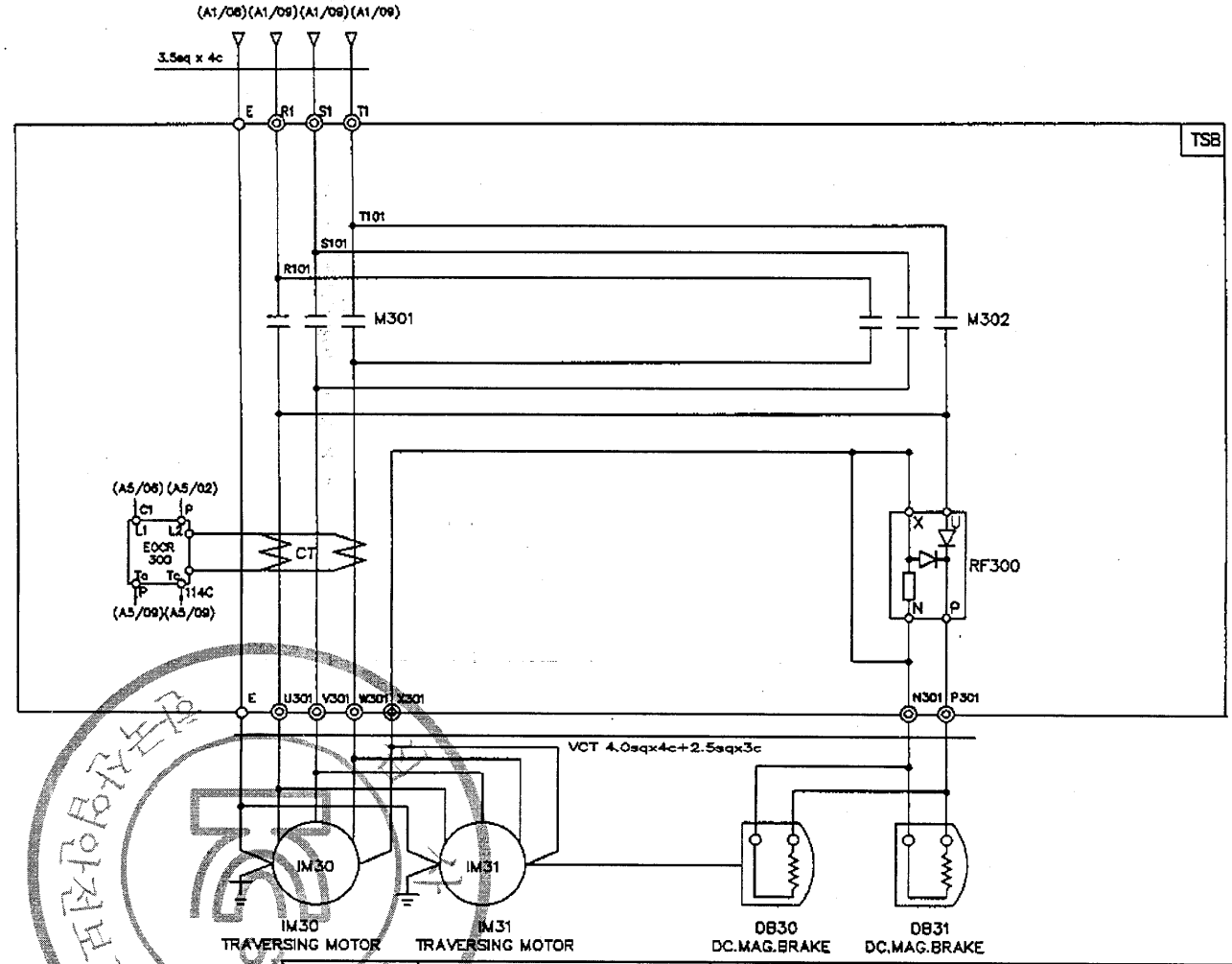

SPECIFICATION / SYMBOLS	TRAVERSING MOTOR	DC MAG' BRAKE	MAGNET CONTACTOR	SILICON RECTIFIER	ELECTRIC OVER CURRENT RELAY	LIMIT SWTCH
DESCRIPTION	IM 30 , 1M31	DB 30	M301 , M302	RF 300	EOCR 300	LS-301 , LS-302
	1.5KW x 4P AC 3PH 480V 60Hz	DC 100V	DOC-22P AC 110V	SR-30	SS-30	HY - W904
	1.0KW x 6P AC 3PH 480V 60Hz	DC 100V	DOC-22P AC 110V	SR-30	SS-30	HY - W904
SELECTION / MAKER	KUK DONG		DAERYUK	ASECO		

MK	DATE	REVISIONS	CHK.	APP.
4				
3				
2				
1				

CUSTOMER		DRAWING	DESIGN	CHECKED	APPROVED	SCALE	DATE	ORDER NO.
DRAWING TITLE	TRAVERSING POWER CONTROL CIRCUIT DIAGRAM					NONE		
		국동호이스트 주식회사 KUK DONG HOIST CO., LTD.				DWG. NO	KDC20E64	

산업안전보건공단
KOREA OCCUPATIONAL SAFETY & HEALTH AGENCY
192.168.11.76 / 2013-12-17 15:49:47

1	2	3	4	5	6	7	8	9	10	11	12	13	14	15	16	17	18	19	20

POWER CIRCUIT

TRAVERSING MOTION

ADR'S NO. C2

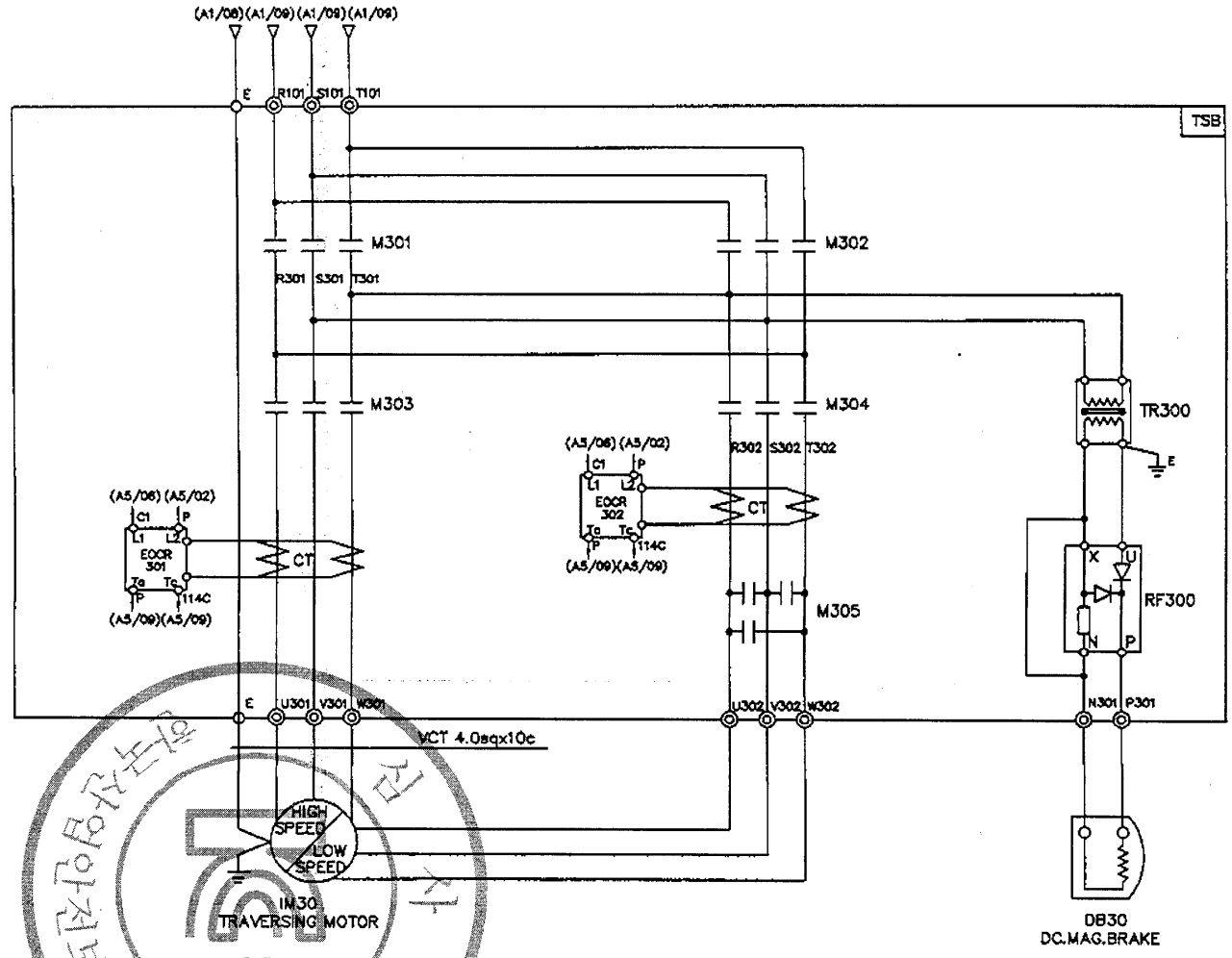

SPECIFICATION / SYMBOLS / DESCRIPTION		TRAVERSING MOTOR	DC MAG' BRAKE	MAGNET CONTACTOR		SILICON RECTIFIER	ELECTRIC OVER CURRENT RELAY	TRANSFORMER
		IM 30	DB30	M301 , M302 , M303	M304 , M305	RF 300	EOCR 301,302	TR300
	480V	1.5/0.75KWx6/12P AC3PH 480V 60Hz	DC 100V	DOC-22P	DOC-22R	SR-30	SS-05	AC480/220V, 300VA
	480V	1.0/0.5KWx4/8P AC3PH 480V 60Hz	DC 100V	DOC-22P	DOC-22R	SR-30	SS-05	AC480/220V, 300VA
SELECTION MAKER		KUKDONG		DAERYUK		ASECO		SHINHAN

MK	DATE	REVISIONS	CHK.	APP.
4				
3				
2				
1				

CUSTOMER		DRAWING	DESIGN	CHECKED	APPROVED	SCALE	DATE	ORDER NO.
DRAWING TITLE	TRAVERSING POWER CONTROL CIRCUIT DIAGRAM					NONE		
		국동호이스트 주식회사 KUK DONG HOIST CO., LTD.				DWG. NO	KDC20E65	

192.168.11.76 / 2013-12-17 15:49:47
산업재해예방 안전보건공단
KOREA OCCUPATIONAL SAFETY & HEALTH AGENCY
산업재해예방 안전보건공단 검사필
본 도면은 배포용

1	2	3	4	5	6	7	8	9	10	11	12	13	14	15	16	17	18	19	20

POWER CIRCUIT

TRAVERSING MOTION

ADR'S NO. C2

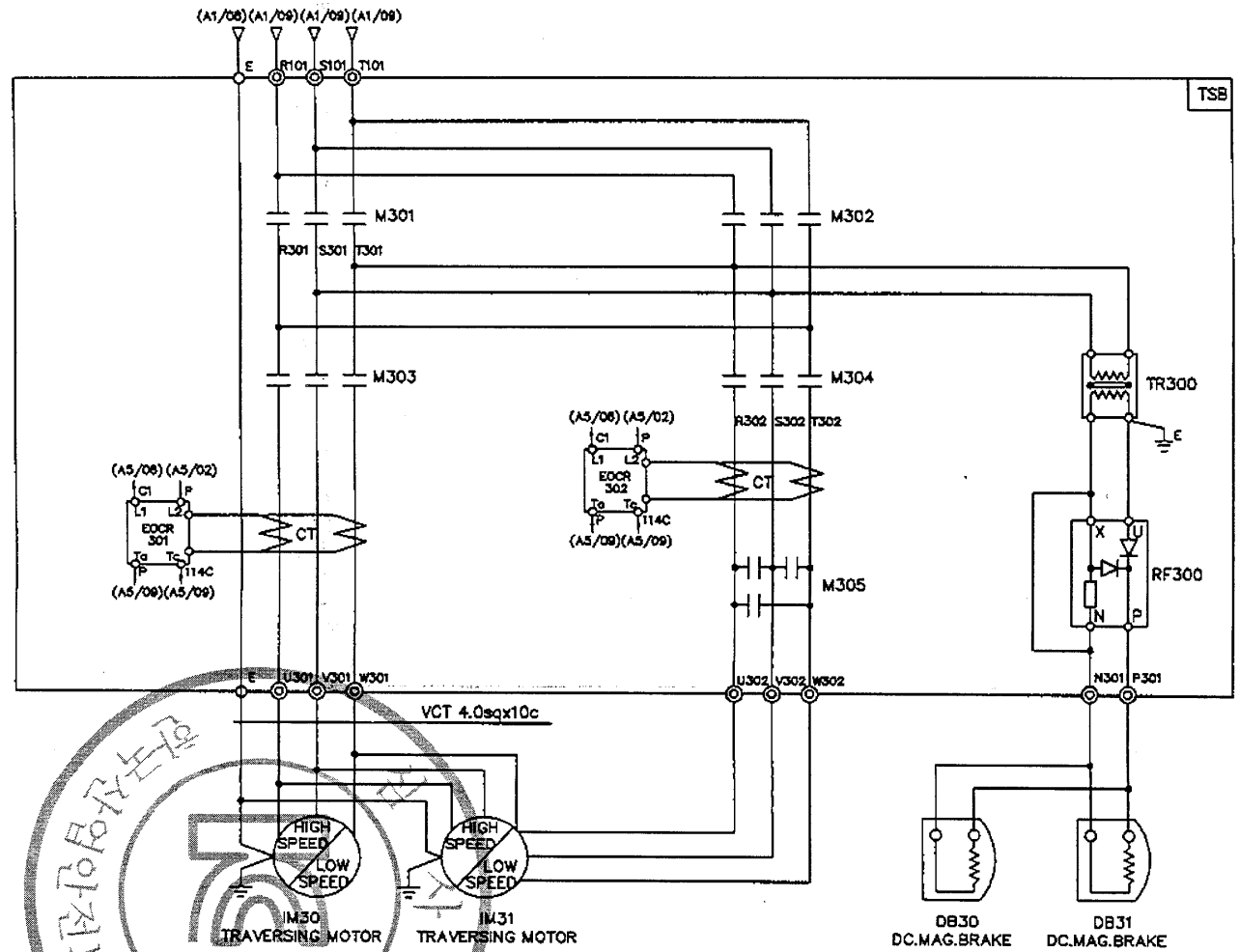

SPECIFICATION / SYMBOLS / DESCRIPTION		TRAVERSING MOTOR	DC MAG' BRAKE	MAGNET CONTACTOR		SILICON RECTIFIER	ELECTRIC OVER CURRENT RELAY	TRANSFORMER
		IM 30 , IM31	DB30 , DB31	M301 , M302 , M303	M304 , M305	RF 300	EOCR 301,302	TR300
	480V	1.5/0.75KWx6/12P AC3PH 480V 60Hz	DC 100V	DOC-22P	DOC-22R	SR-30	SS-30	AC480/220V, 300VA
	480V	1.0/0.5KWx4/8P AC3PH 480V 60Hz	DC 100V	DOC-22P	DOC-22R	SR-30	SS-30	AC480/220V, 300VA
SELECTION / MAKER		KUKDONG		DAERYUK		ASECO		SHINHAN

MK	DATE	REVISIONS	CHK.	APP.
4				
3				
2				
1				

CUSTOMER		DRAWING	DESIGN	CHECKED	APPROVED	SCALE	DATE	ORDER NO.
DRAWING TITLE	TRAVERSING POWER CONTROL CIRCUIT					NONE		
	DIAGRAM	국동호이스트 주식회사 KUK DONG HOIST CO., LTD.				DWG. NO	KDC20E66	

산업재해예방
아주대학교
KOREA OCCUPATIONAL SAFETY & HEALTH AGENCY
192.168.11.76 / 2013-12-17 15:49:47

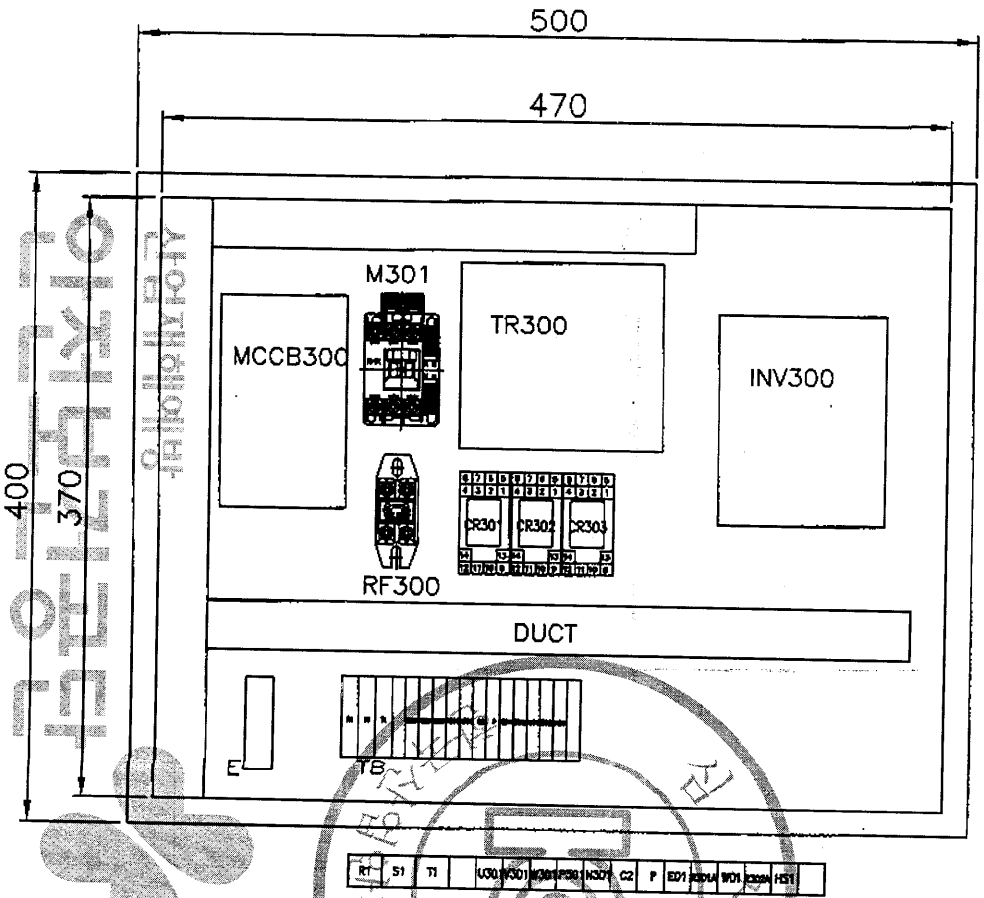

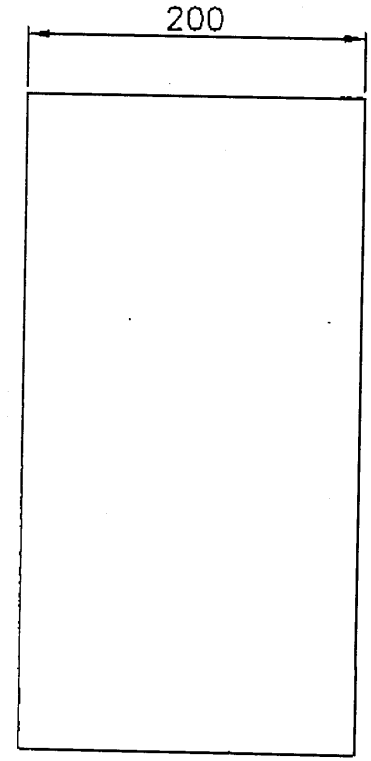

NO.	DESCRIPTION	MT'L	SUB QTY	TOTAL QTY	SUB WEIGHT(Kg)	TOTAL WEIGHT(Kg)	REMARKS.
2	수판	SS400		1			
1	T/S BOX	PUR		1			
11	EARTH BUS BAR	PUR		1			
10	DUCT	PUR		1			
9	TERMINAL BLOCK	PUR		1			
8	INVERTER	PUR		1			
7	TR	PUR		1			
6	RELAY & SCOKET	PUR		1			
5	RF	PUR		1			
4	MC	PUR		1			
3	MCCB	PUR		1			

PROJECT				DATE	DIM
					mm
TITLE	T/S CONTROL PANEL(INVERTER)			SCALE	PROJECTION
				A3/3	3rd
DRAWN	DESIGNED	CHECKED	APPROVED	REF. DRAWING	

국동호이스트 주식회사
KUK DONG HOIST CO., LTD.

SHEET No.

DWG No. KD2010EI001

불법복제 및 배포금지
192.168.11.76 / 2013-12-17 15:49:47
KOREA OCCUPATIONAL SAFETY & HEALTH AGENCY
한국산업안전보건공단

KD2010EI002

TRAVERSING MOTION

ADR'S NO.

POWER CIRCUIT DIAGRAM

CONTROL CIRCUIT DIAGRAM

BRAKE | EAST | WEST | HIGH SPEED

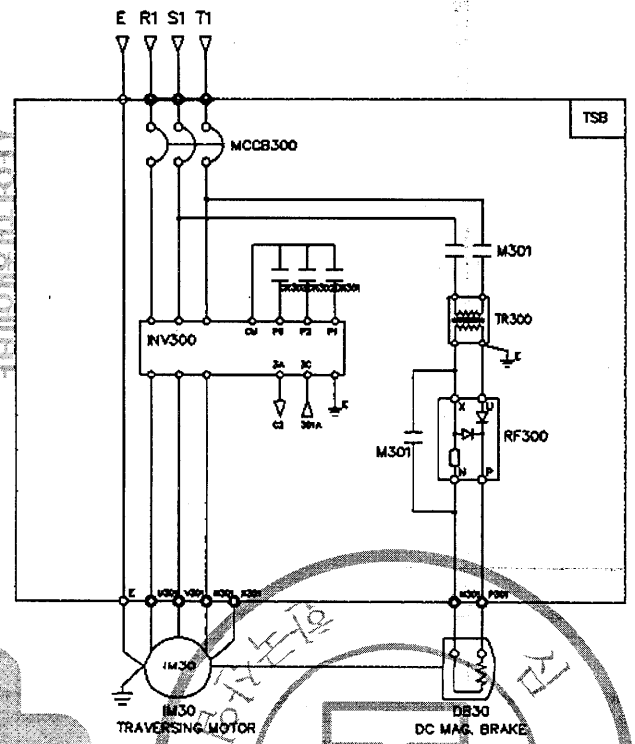

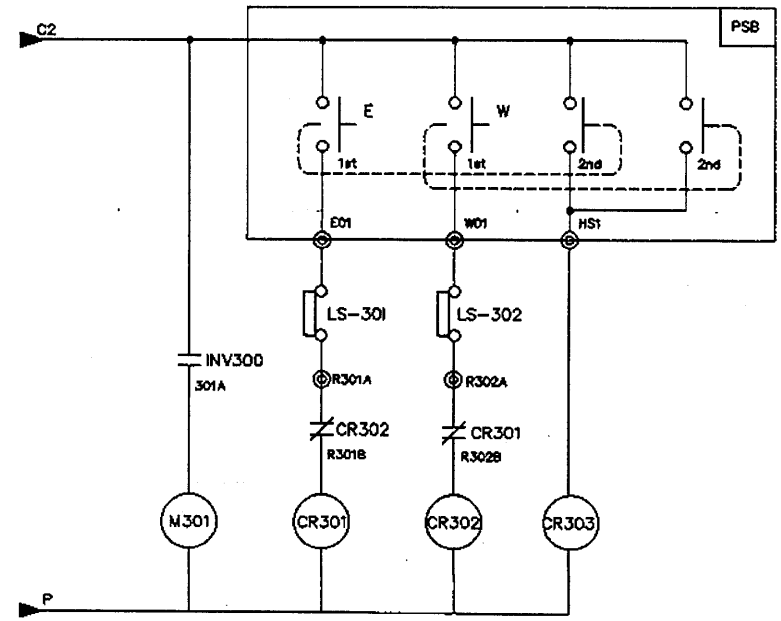

SPECIFICATION / SYMBOLS / DESCRIPTION	TRAVERSING POWER	TRAVERSING MOTOR	DC MAG' BRAKE	NO FUSE BREAKER	TRANSFORMER	BRAKE MAGNET	CONTROL RELAY	INVERTER	SILICON RECTIFIER	
		IM 30	DB30	MCCB300	TR 300	M301	CR301,302,303	INV300	RF300	
	AC 3PH 220V 60Hz	1.5KW x 4P	DC 100V	DBE-33AF/20AT	220/220V,300VA	DM-22C	MINI 4a4b(Coil AC110V)	SV022iG5A-2	SR-30	
	AC 3PH 220V 60Hz	1.0KW x 6P	DC 100V	DBE-33AF/20AT	220/220V,300VA	DM-22C	MINI 4a4b(Coil AC110V)	SV022iG5A-2	SR-30	
	AC 3PH 380V,440V,460V,480V 60Hz	1.5KW x 4P	DC 100V	DBE-33AF/20AT	380/220V,300VA	DM-22C	MINI 4a4b(Coil AC110V)	SV022iG5A-4	SR-30	
	AC 3PH 380V,440V,460V,480V 60Hz	1.0KW x 6P	DC 100V	DBE-33AF/20AT	440/220V,300VA	DM-22C	MINI 4a4b(Coil AC110V)	SV022iG5A-4	SR-30	
SELECTION / MAKER	KUK DONG HOIST							LS	ASAN	

MK	DATE	REVISIONS	CHK.	APP.
4				
3				
2				
1				

CUSTOMER	INVERTER CONTROL
DRAWING TITLE	TRAVERSING POWER & CONTROL CIRCUIT DIAGRAM

DRAWING	DESIGN	CHECKED	APPROVED	SCALE	DATE	ORDER NO.

KD 국동호이스트 주식회사 KUK DONG HOIST CO., LTD.

DWG. NO KD2010EI002

192.168.11.76 / 2013-12-17 15:49:47

KD2010EI003

1	2	3	4	5	6	7	8	9	10	11	12	13	14	15	16	17	18	19	20

TRAVERSING MOTION

ADR'S NO.

POWER CIRCUIT DIAGRAM

CONTROL CIRCUIT DIAGRAM

BRAKE | EAST | WEST | HIGH SPEED

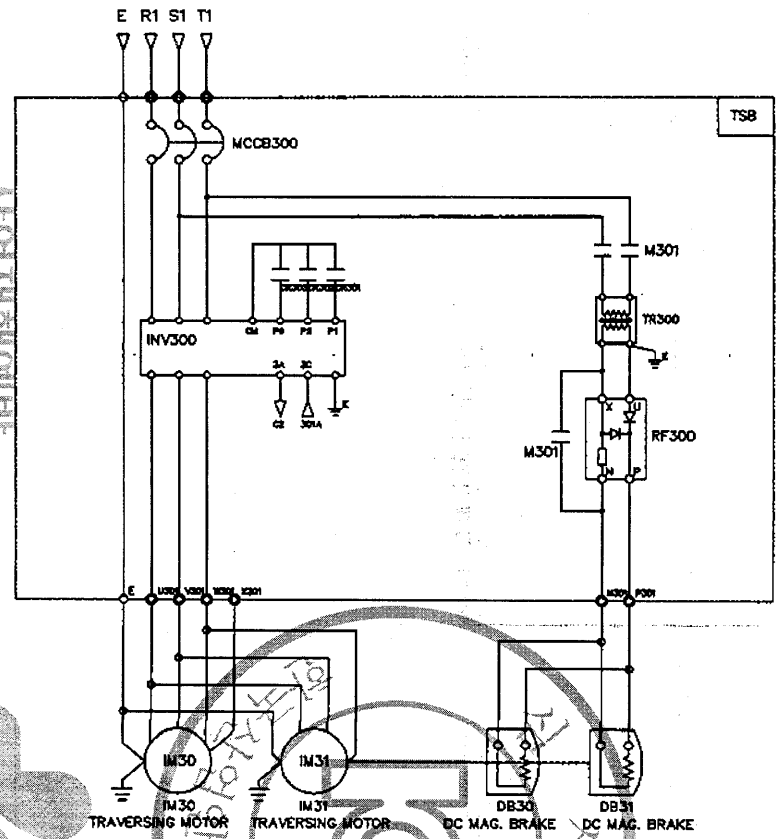

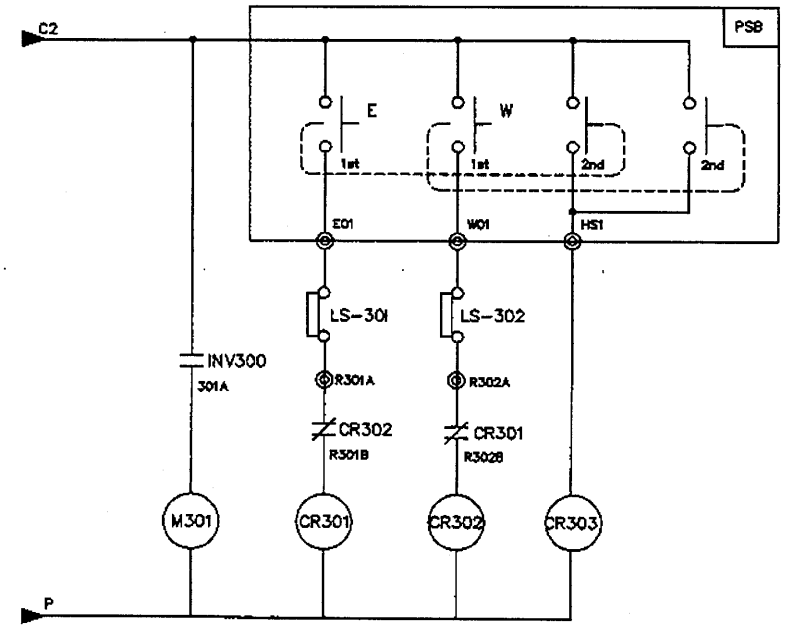

SPECIFICATION / SYMBOLS / DESCRIPTION	TRAVERSING POWER	TRAVERSING MOTOR	DC MAG' BRAKE	NO FUSE BREAKER	TRANSFORMER	BRAKE MAGNET	CONTROL RELAY	INVERTER	SILICON RECTIFIER	
		IM 30	DB30	MCCB300	TR 300	M301	CR301,302,303	INV300	RF300	
	AC 3PH 220V 60Hz	1.5KW x 4P	DC 100V	DBE-33AF/20AT	220/220V,300VA	DM-22C	MINI 4a4b(Coil AC110V)	SV037iG5A-2	SR-30	
	AC 3PH 220V 60Hz	1.0KW x 6P	DC 100V	DBE-33AF/20AT	220/220V,300VA	DM-22C	MINI 4a4b(Coil AC110V)	SV037iG5A-2	SR-30	
	AC 3PH 380V,440V,460V,480V 60Hz	1.5KW x 4P	DC 100V	DBE-33AF/20AT	380/220V,300VA	DM-22C	MINI 4a4b(Coil AC110V)	SV037iG5A-4	SR-30	
	AC 3PH 380V,440V,460V,480V 60Hz	1.0KW x 6P	DC 100V	DBE-33AF/20AT	440/220V,300VA	DM-22C	MINI 4a4b(Coil AC110V)	SV037iG5A-4	SR-30	
SELECTION / MAKER	KUK DONG HOIST							LS	ASAN	

MK	DATE	REVISIONS	CHK.	APP.
4				
3				
2				
1				

CUSTOMER	INVERTER CONTROL
DRAWING TITLE	TRAVERSING POWER & CONTROL CIRCUIT DIAGRAM

DRAWING	DESIGN	CHECKED	APPROVED	SCALE	DATE	ORDER NO.

KD 국동호이스트 주식회사 KUK DONG HOIST CO., LTD.

DWG. NO KD2010EI003

192.168.11.76 / 2013-12-17 15:49:47

불법복제 및 배포금지

KDC75EB00

ADR'S NO.

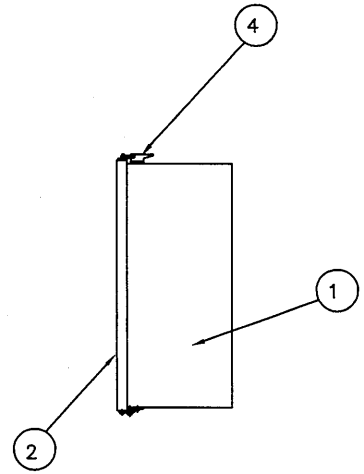

NO	DESCRIPTION	MT'L	REMARKS
1	PANEL CASE	SPC	1.6t
2	PANEL COVER	SPC	1.6t
3	HINGE	PUR'	
4	CLAMP	PUR'	
5	SPONGE	PUR'	

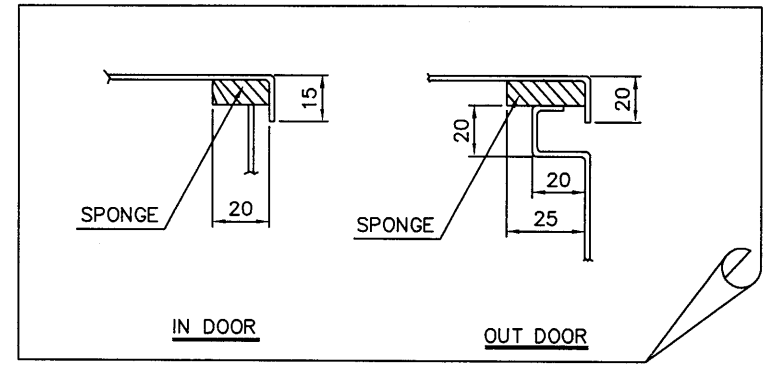

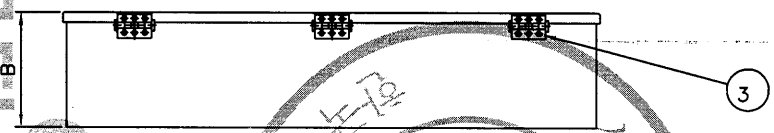

N O T E

1.PROTECTION DEGREE ;
  A, INDOOR TYPE : DUST PROOF
  B, OUT DOOR TYPE : SPLASH PROOF
2.FINAL PAINTING COLOR (MUNSELL NO.)
  A. IN SIDE : 10B 3/5
  B. OUT SIDE : 10B 3/5
3.PAINTING THICKNESS : ABOVE 40 um
4.APPLICATION VOLTAGE : 220V,380V,440V,460V,480V
5.제어용 전선 : 2.5sq KIV,HIV
6.외함 개방 구조는 다음과 같다.
  1) 외함 개방시 충전 부분이 차단되도록 한다.
  2) 외함 개방 후 충전되어있는 부분은 IP2X 이상의 직접 접촉 방호가 되어있을것.

SELECTION	HOIST CAPACITY	DESCRIPTION	IN DOOR			OUT DOOR			REMARK
			A	B	L	A	B	L	
	7.5 TON	NORMAL	360	170	790	360	170	810	
☞		CREEP	360	170	790	360	170	810	

MK	DATE	REVISIONS	CHK.	APP.
4				
3				
2				
1				

CUSTOMER	
DRAWING TITLE	HOISTING CONTROL BOX LAY-OUT

DRAWING	DESIGN	CHECKED	APPROVED	SCALE	DATE	ORDER NO.
				NONE		

극동호이스트 주식회사
KUK DONG HOIST CO., LTD.

DWG. NO KDC75EB00

192.168.11.76 / 2013-12-17 15:49:47
KOREA OCCUPATIONAL SAFETY & HEALTH AGENCY

불법복제 및 배포금지

KDC75BA21

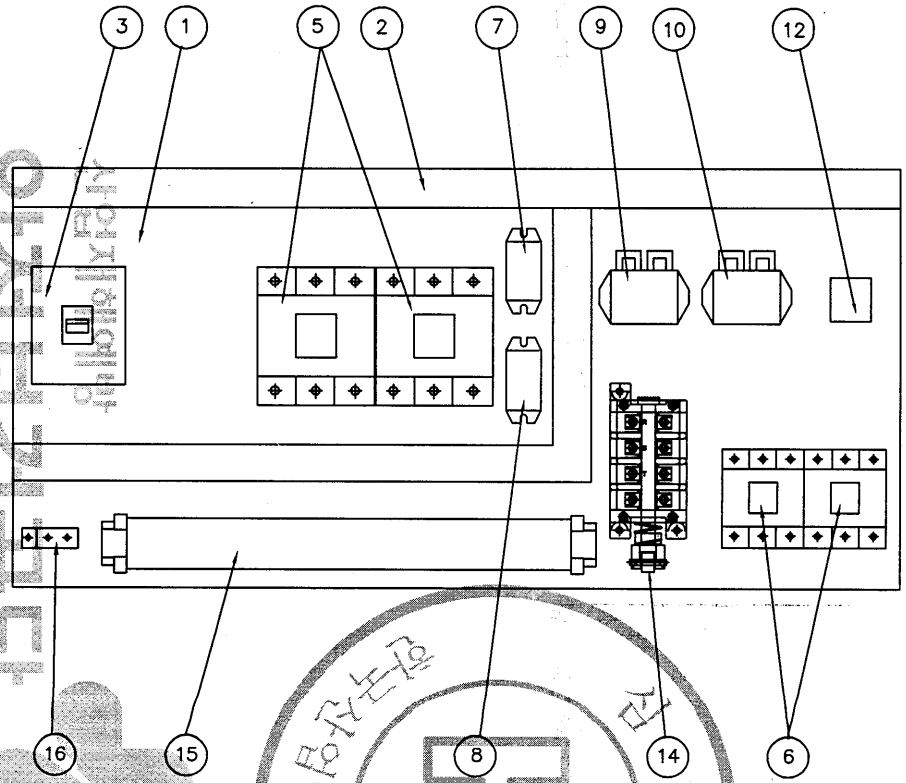

NO	DESCRIPTION	SPECIFICATION	Q'TY	REMARK
1	CHASSIS PLATE		1	아 연 도 금
2	CABLE DUCT	–	1	
3	N.F.B	53AF/40AT	1	HOISTING
4				
5	MAGNET CONTACTOR	DMC65C	2	HOISTING
6	MAGNET CONTACTOR	DMC22C	2	CREEP HOIST
7	SILICON RECTIFIER	SR–60	1	HOISTING
8	SILICON RECTIFIER	SR–30	1	CREEP HOIST
9	E.O.C.R	SS–30	1	HOISTING
10	E.O.C.R	SS–30	1	CREEP HOIST
12	RELAY & SOCKET	4a4b	1	
14	UPPER LIMITER	AC 600V, 75A	1	LS–1,2
15	TERMINAL BLOCK	60A,15A		
16	EARTH TERMINAL	3tx20x50	1	

NOTE

1. UPPER LIMIT LS–1,LS–2의 접점 허용 전류 용량. : AC 600V, 75A
2. POWER SOURCE : AC 3ø 220V 60HZ
3. EARTH TERMINAL RESISTANCE : 0.018Ω

NOTE

1. 전선의 색상은 다음과 같다.
   1) 흑색 : 교류 및 직류 전원선로
   2) 적색 : 교류제어선
   3) 주황색 : 외부 전원에서 공급되는 연동장치 제어회로
   4) 녹색 또는 녹색과 황색 혼용 : 접지선
   5) 청색 : 직류 제어선로
2. CABLE MATERIAL : KIV OR EQUIVALENT / MIN SIZE : 2.5sq
3. 제어용 전선 : 2.5mm KIV,HIV
4. 제작시 다소 변경 될수있음.
5. 외함 개방구조는 다음과 같을것.
   1) 외함 개방시 충전부분이 차단되도록 할것.
   2) 외함 개방후 충전되어있는 부분은 IP2X 이상의 직접 접촉 방호가 되어있을것.

MK	DATE	REVISIONS	CHK.	APP.
4				
3				
2				
1				

CUSTOMER		DRAWING	DESIGN	CHECKED	APPROVED	SCALE	DATE	ORDER NO.
DRAWING TITLE	CREEP HOIST CONTROL BOX					NONE		
	ARRANGEMENT DRAWING					DWG. NO	KDC75BA21	

192.168.11.76 / 2013-12-17 15:49:47
KOREA OCCUPATIONAL SAFETY & HEALTH AGENCY

불법복제 및 배포금지

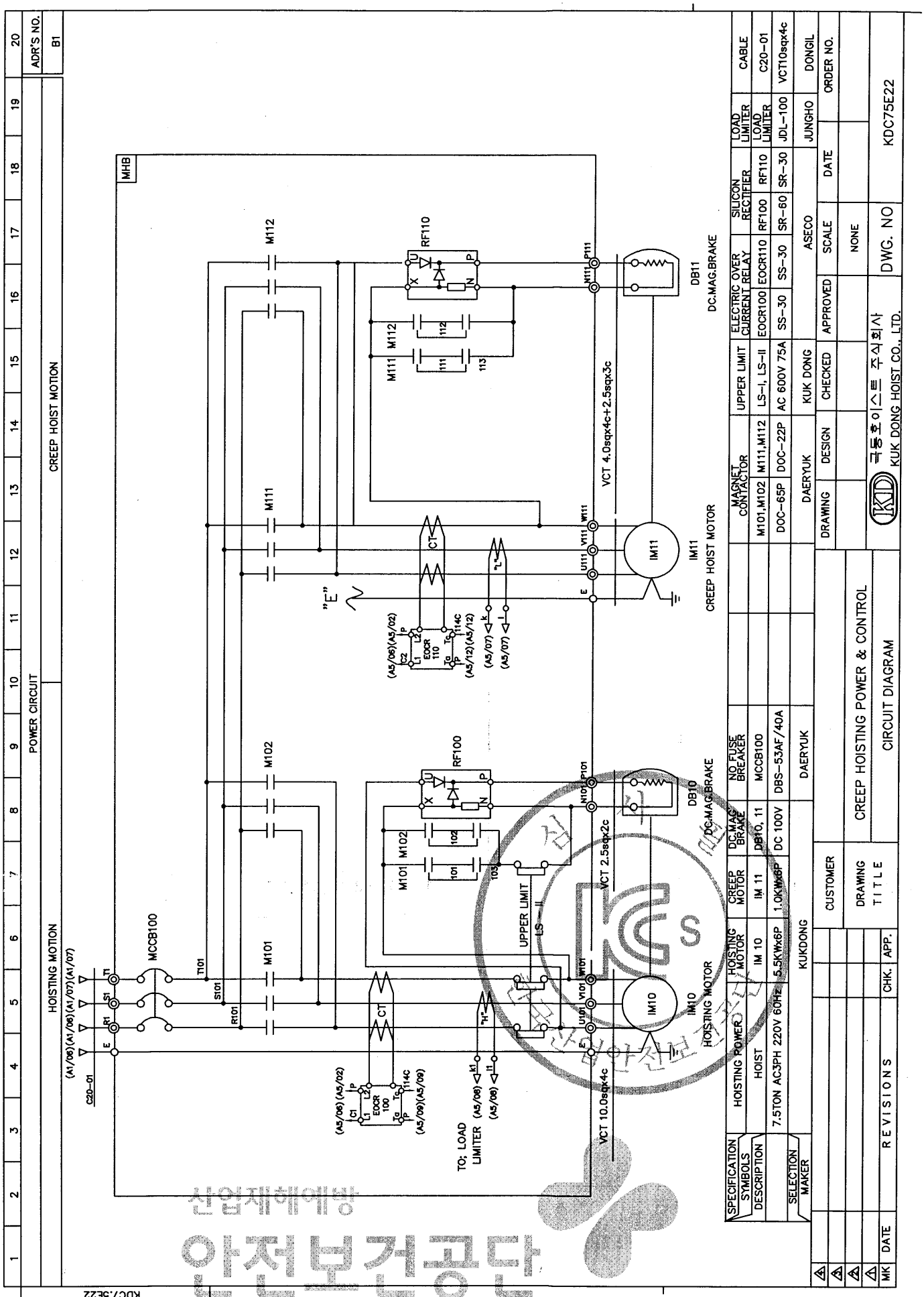

산업재해예방
안전보건공단
KOREA OCCUPATIONAL SAFETY & HEALTH AGENCY

192.168.11.76 / 2013-12-17 15:49:47

불법복제 및 배포금지

KDC75BA31

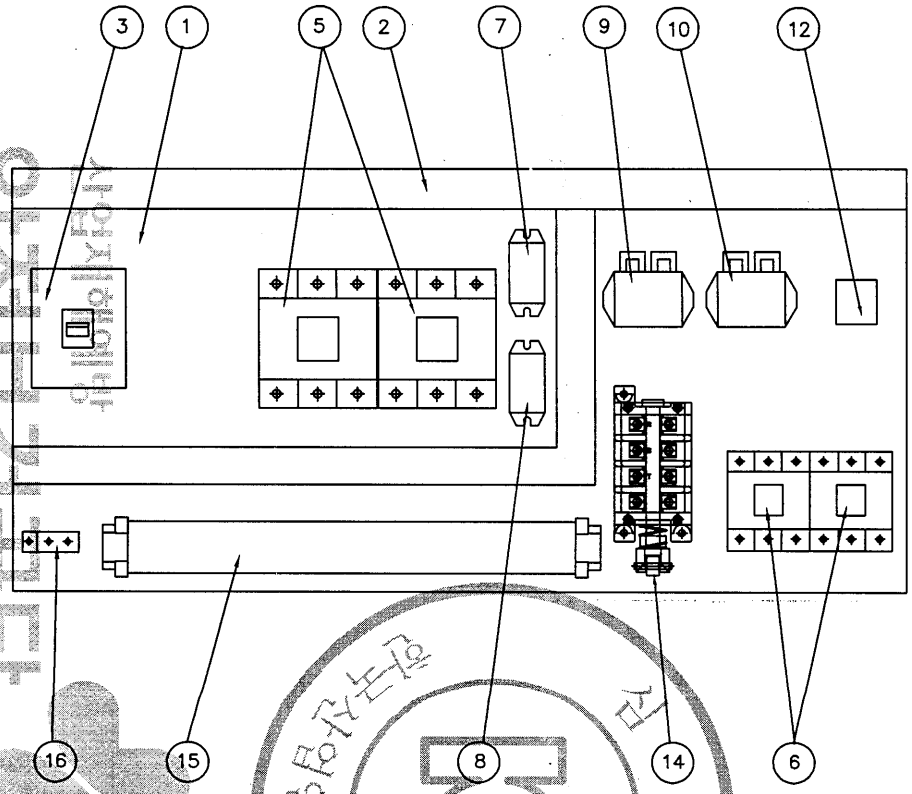

NO	DESCRIPTION	SPECIFICATION	Q'TY	REMARK
1	CHASSIS PLATE		1	아 연 도 금
2	CABLE DUCT	–	1	
3	N.F.B	33AF/30AT	1	HOISTING
4				
5	MAGNET CONTACTOR	DMC48C	2	HOISTING
6	MAGNET CONTACTOR	DMC22C	2	CREEP HOIST
7	SILICON RECTIFIER	SR–60	1	HOISTING
8	SILICON RECTIFIER	SR–30	1	CREEP HOIST
9	E.O.C.R	SS–30	1	HOISTING
10	E.O.C.R	SS–30	1	CREEP HOIST
12	RELAY & SOCKET	4a4b	1	
14	UPPER LIMITER	AC 600V, 75A	1	LS–1,2
15	TERMINAL BLOCK	60A,15A		
16	EARTH TERMINAL	3tx20x50	1	

NOTE

1. UPPER LIMIT LS–1,LS–2의 접점 허용 전류 용량. : AC 600V, 75A
2. POWER SOURCE : AC 3ø 380V 60HZ
3. EARTH TERMINAL RESISTANCE : 0.018Ω

NOTE

1. 전선의 색상은 다음과 같다.
   1) 흑색 : 고류 및 직류 전원선로
   2) 적색 : 고류제어선
   3) 주황색 : 외부 전원에서 공급되는 연동장치 제어회로
   4) 녹색 또는 녹색과 황색 혼용 : 접지선
   5) 청색 : 직류 제어선로
2. CABLE MATERIAL : KIV OR EQUIVALENT / MIN SIZE : 2.5sq
3. 제어용 전선 : 2.5mm KIV,HIV
4. 제작시 다소 변경 될수있음.
5. 외함 개방구조는 다음과 같을것.
   1) 외함 개방시 충전부분이 차단되도록 할것.
   2) 외함 개방후 충전되어있는 부분은 IP2X 이상의 직접 접촉 방호가 되어있을것.

MK	DATE	REVISIONS	CHK.	APP.
4				
3				
2				
1				

CUSTOMER		DRAWING	DESIGN	CHECKED	APPROVED	SCALE	DATE	ORDER NO.
DRAWING TITLE	CREEP HOIST CONTROL BOX					NONE		
	ARRANGEMENT DRAWING					DWG. NO	KDC75BA31	

192.168.11.76 / 2013-12-17 15:49:47

192.168.11.76 / 2013-12-17 15:49:47
KOREA OCCUPATIONAL SAFETY & HEALTH AGENCY
한국산업안전보건공단
산업안전보건연구원
불법복제 및 배포금지

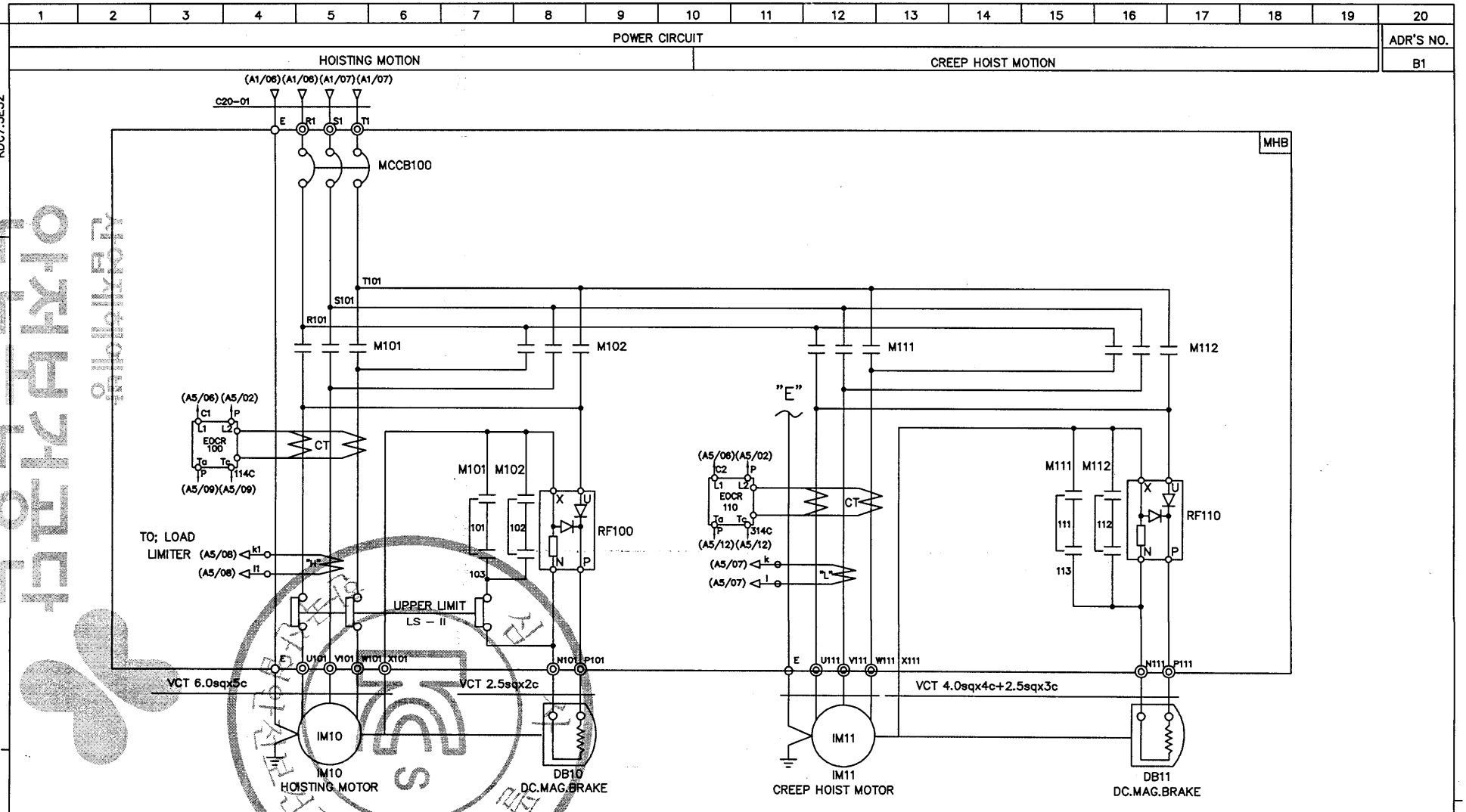

SPECIFICATION / SYMBOLS	HOISTING POWER	HOISTING MOTOR	CREEP MOTOR	DC.MAG BRAKE	NO FUSE BREAKER			MAGNET CONTACTOR		UPPER LIMIT	ELECTRIC OVER CURRENT RELAY		SILICON RECTIFIER		LOAD LIMITER	CABLE
DESCRIPTION	HOIST	IM 10	IM 11	DB10, 11	MCCB100			M101,M102	M111,M112	LS-I, LS-II	EOCR100	EOCR110	RF100	RF110	LOAD LIMITER	C20-01
	7.5TON AC 3PH 380V 60HZ	5.5KW x 6P	1.0KWx6P	DC 100V	DBE-33AF/30A			DOC-48P	DOC-22P	AC 600V 75A	SS-30	SS-05	SR-60	SR-30	JDL-100	VFCT 6.0sqx4c
SELECTION / MAKER	KUKDONG				DAERYUK			DAERYUK		KUKDONG	ASECO				JUNGHO	DONGIL

MK	DATE	REVISIONS	CHK.	APP.	CUSTOMER		DRAWING	DESIGN	CHECKED	APPROVED	SCALE	DATE	ORDER NO.
					DRAWING TITLE	CREEP HOISTING POWER CONTROL CIRCUIT					NONE		
						DIAGRAM					DWG. NO	KDC75E32	

불법복제 및 배포금지

KDC75BA41

ADR'S NO.

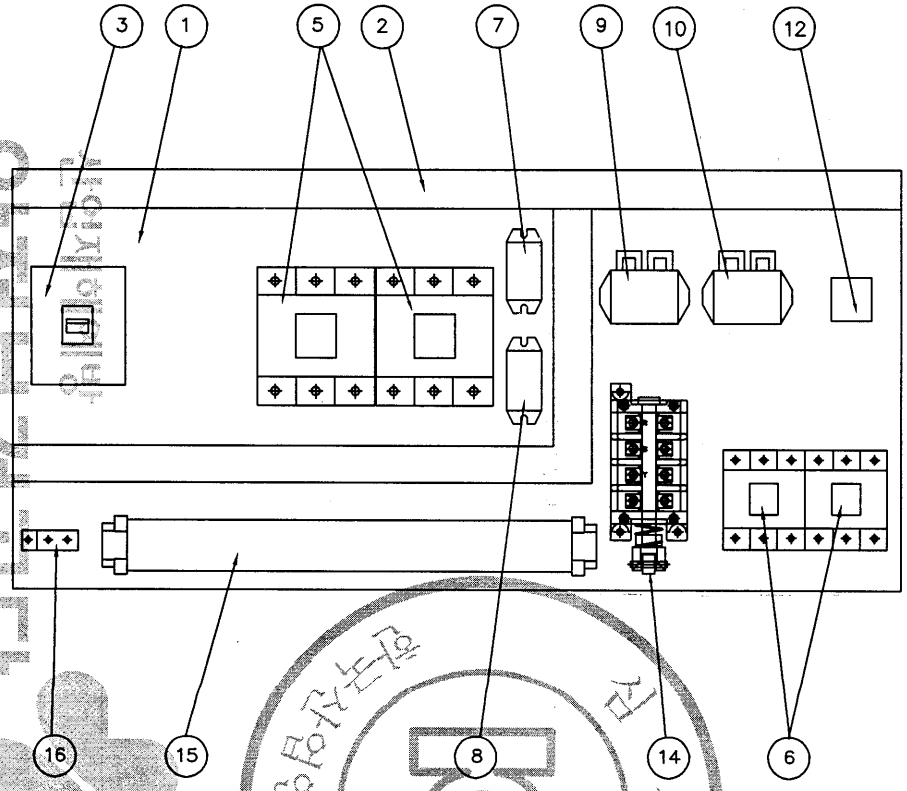

NO	DESCRIPTION	SPECIFICATION	Q'TY	REMARK
1	CHASSIS PLATE		1	아 연 도 금
2	CABLE DUCT	–	1	
3	N.F.B	33AF/30AT	1	HOISTING
4				
5	MAGNET CONTACTOR	DMC48C	2	HOISTING
6	MAGNET CONTACTOR	DMC22C	2	CREEP HOIST
7	SILICON RECTIFIER	SR–60	1	HOISTING
8	SILICON RECTIFIER	SR–30	1	CREEP HOIST
9	E.O.C.R	SS–30	1	HOISTING
10	E.O.C.R	SS–30	1	CREEP HOIST
12	RELAY & SOCKET	4a4b	1	
14	UPPER LIMITER	AC 600V, 75A	1	LS–1,2
15	TERMINAL BLOCK	60A,15A		
16	EARTH TERMINAL	3tx20x50	1	

NOTE

1. UPPER LIMIT LS–1,LS–2의 접점 허용 전류 용량. : AC 600V, 75A
2. POWER SOURCE : AC, 3ø 440V 60HZ
3. EARTH TERMINAL RESISTANCE : 0.018Ω

NOTE

1. 전선의 색상은 다음과 같다.
   1) 흑색 : 교류 및 직류 전원선로
   2) 적색 : 교류제어선
   3) 주황색 : 외부 전원에서 공급되는 연동장치 제어회로
   4) 녹색 또는 녹색과 황색 혼용 : 접지선
   5) 청색 : 직류 제어선로
2. CABLE MATERIAL : KIV OR EQUIVALENT, MIN SIZE : 2.5sq
3. 제어용 전선 : 2.5mm KIV,HIV
4. 제작시 다소 변경 될수있음.
5. 외함 개방구조는 다음과 같을것.
   1) 외함 개방시 충전부분이 차단되도록 할것.
   2) 외함 개방후 충전되어있는 부분은 IP2X 이상의 직접 접촉 방호가 되어있을것.

MK	DATE	REVISIONS	CHK.	APP.
4				
3				
2				
1				

CUSTOMER		DRAWING	DESIGN	CHECKED	APPROVED	SCALE	DATE	ORDER NO.
DRAWING TITLE	CREEP HOIST CONTROL BOX					NONE		
	ARRANGEMENT DRAWING					DWG. NO	KDC75BA41	

192.168.11.76 / 2013-12-17 15:49:47

불법복제 및 배포금지

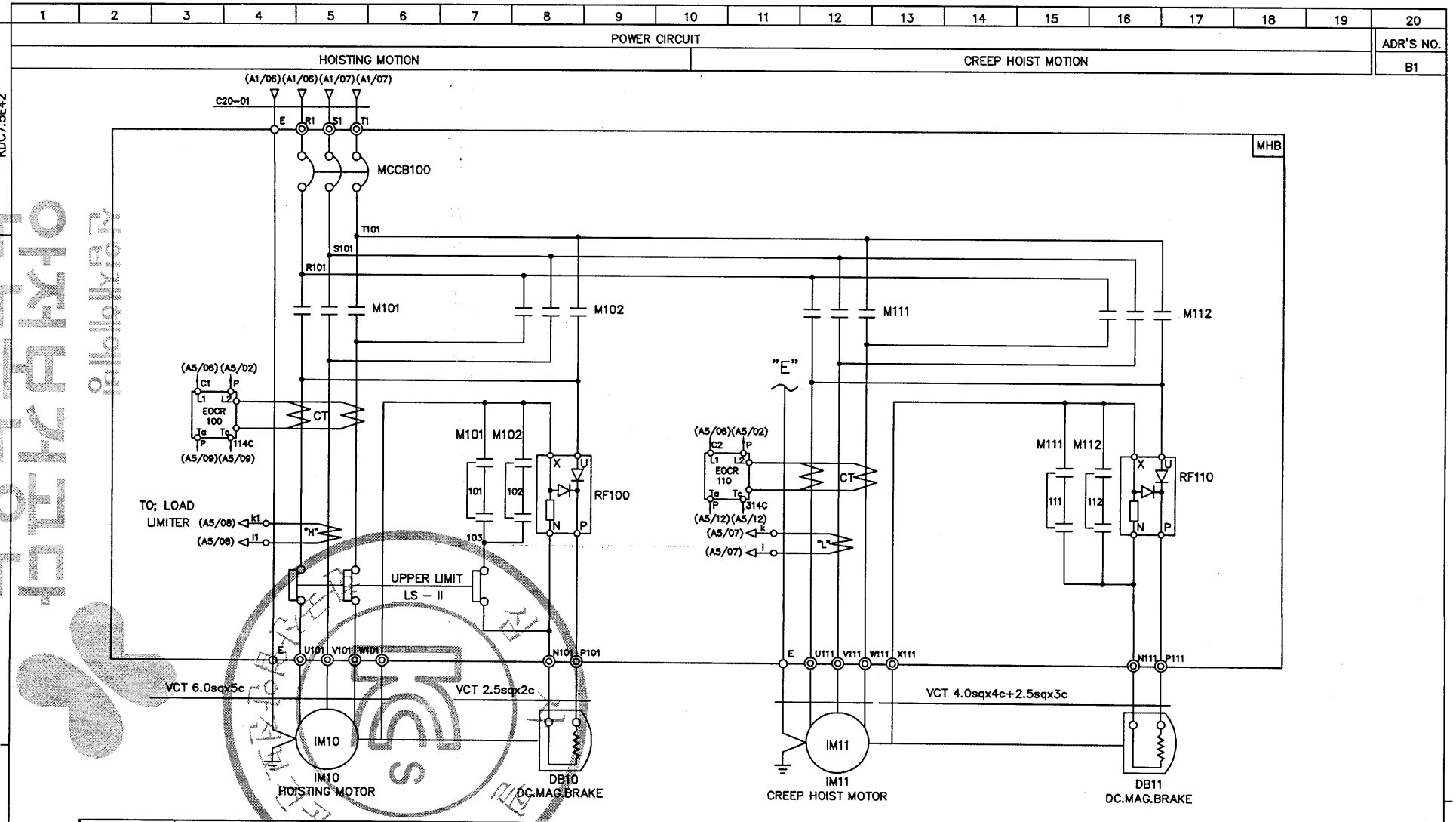

SPECIFICATION / SYMBOLS	HOISTING POWER	HOISTING MOTOR	CREEP MOTOR	DC.MAG BRAKE	NO FUSE BREAKER	MAGNET CONTACTOR		UPPER LIMIT	ELECTRIC OVER CURRENT RELAY		SILICON RECTIFIER		LOAD LIMITER	CABLE
DESCRIPTION	HOIST	IM 10	IM 11	DB10, 11	MCCB100	M101,M102	M111,M112	LS-I, LS-II	EOCR100	EOCR110	RF100	RF110	LOAD LIMITER	C20-01
	7.5TON AC 3PH 440V 60Hz	5.5KW x 6P	1.0KWx6P	DC 100V	DBE-33AF/30A	DOC-48P	DOC-22P	AC 600V 75A	SS-30	SS-05	SR-60	SR-30	JDL-100	VFCT 6.0sqx4c
SELECTION / MAKER	KUKDONG				DAERYUK	DAERYUK		KUKDONG	ASECO				JUNGHO	DONGIL

MK	DATE	REVISIONS	CHK.	APP.
4				
3				
2				
1				

CUSTOMER		DRAWING	DESIGN	CHECKED	APPROVED	SCALE	DATE	ORDER NO.
DRAWING TITLE	CREEP HOISTING POWER CONTROL CIRCUIT DIAGRAM					NONE		
		극동호이스트 주식회사 KUK DONG HOIST CO., LTD.				DWG. NO	KDC75E42	

192.168.11.76 / 2013-12-17 15:49:47
KOREA OCCUPATIONAL SAFETY & HEALTH AGENCY
한국산업안전보건공단

KDC75BA51

ADR'S NO.

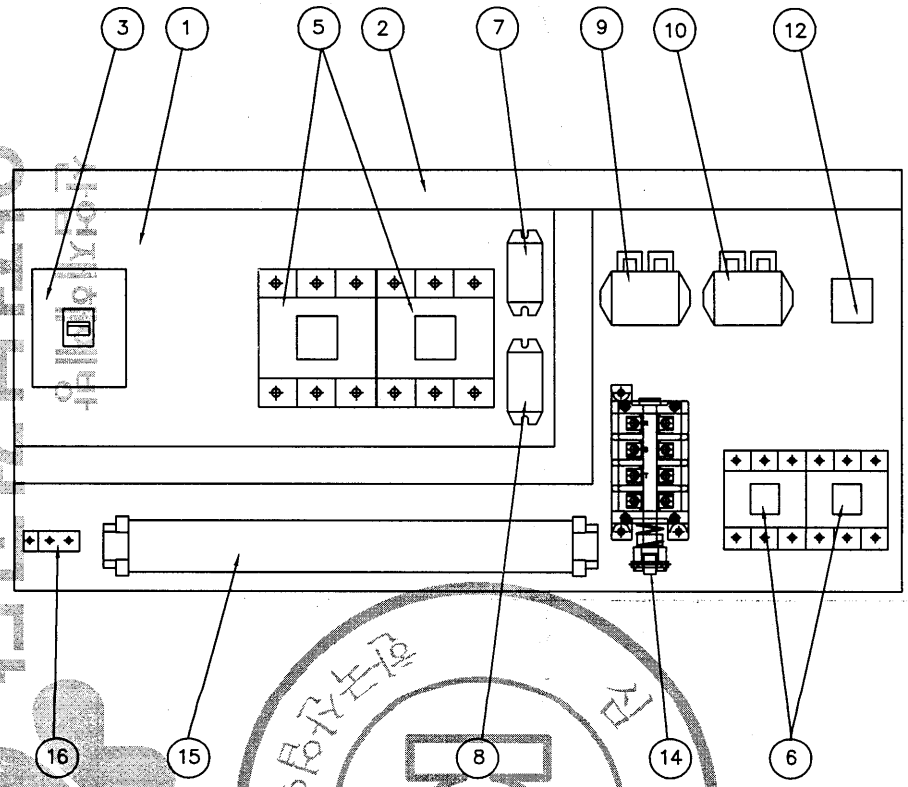

NO	DESCRIPTION	SPECIFICATION	Q'TY	REMARK
1	CHASSIS PLATE		1	아 연 도 금
2	CABLE DUCT	–	1	
3	N.F.B	33AF/30AT	1	HOISTING
4				
5	MAGNET CONTACTOR	DMC48C	2	HOISTING
6	MAGNET CONTACTOR	DMC22C	2	CREEP HOIST
7	SILICON RECTIFIER	SR–60	1	HOISTING
8	SILICON RECTIFIER	SR–30	1	CREEP HOIST
9	E.O.C.R	SS–30	1	HOISTING
10	E.O.C.R	SS–30	1	CREEP HOIST
12	RELAY & SOCKET	4a4b	1	
14	UPPER LIMITER	AC 600V, 75A	1	LS–1,2
15	TERMINAL BLOCK	60A,15A		
16	EARTH TERMINAL	3tx20x50	1	

NOTE

1. UPPER LIMIT LS–1,LS–2의 접점 허용 전류 용량. : AC 600V, 75A
2. POWER SOURCE : AC. 3ø 460V 60HZ
3. EARTH TERMINAL RESISTANCE : 0.018Ω

NOTE

1. 전선의 색상은 다음과 같다.
   1) 흑색 : 고류 및 직류 전원선로
   2) 적색 : 고류제어선
   3) 주황색 : 외부 전원에서 공급되는 연동장치 제어회로
   4) 녹색 또는 녹색과 황색 혼용 : 접지선
   5) 청색 : 직류 제어선로
2. CABLE MATERIAL : KIV OR EQUIVALENT
   MIN SIZE : 2.5sq
3. 제어용 전선 : 2.5mm KIV,HIV
4. 제작시 다소 변경 될수있음.
5. 외함 개방구조는 다음과 같을것.
   1) 외함 개방시 충전부분이 차단되도록 할것.
   2) 외함 개방후 충전되어있는 부분은 IP2X 이상의 직접 접촉 방호가 되어있을것.

MK	DATE	REVISIONS	CHK.	APP.
4				
3				
2				
1				

CUSTOMER		DRAWING	DESIGN	CHECKED	APPROVED	SCALE	DATE	ORDER NO.
DRAWING TITLE	CREEP HOIST CONTROL BOX					NONE		
	ARRANGEMENT DRAWING					DWG. NO	KDC75BA51	

KOREA OCCUPATIONAL SAFETY & HEALTH AGENCY
192.168.11.76 / 2013-12-17 15:49:47
무단 복제 및 배포금지

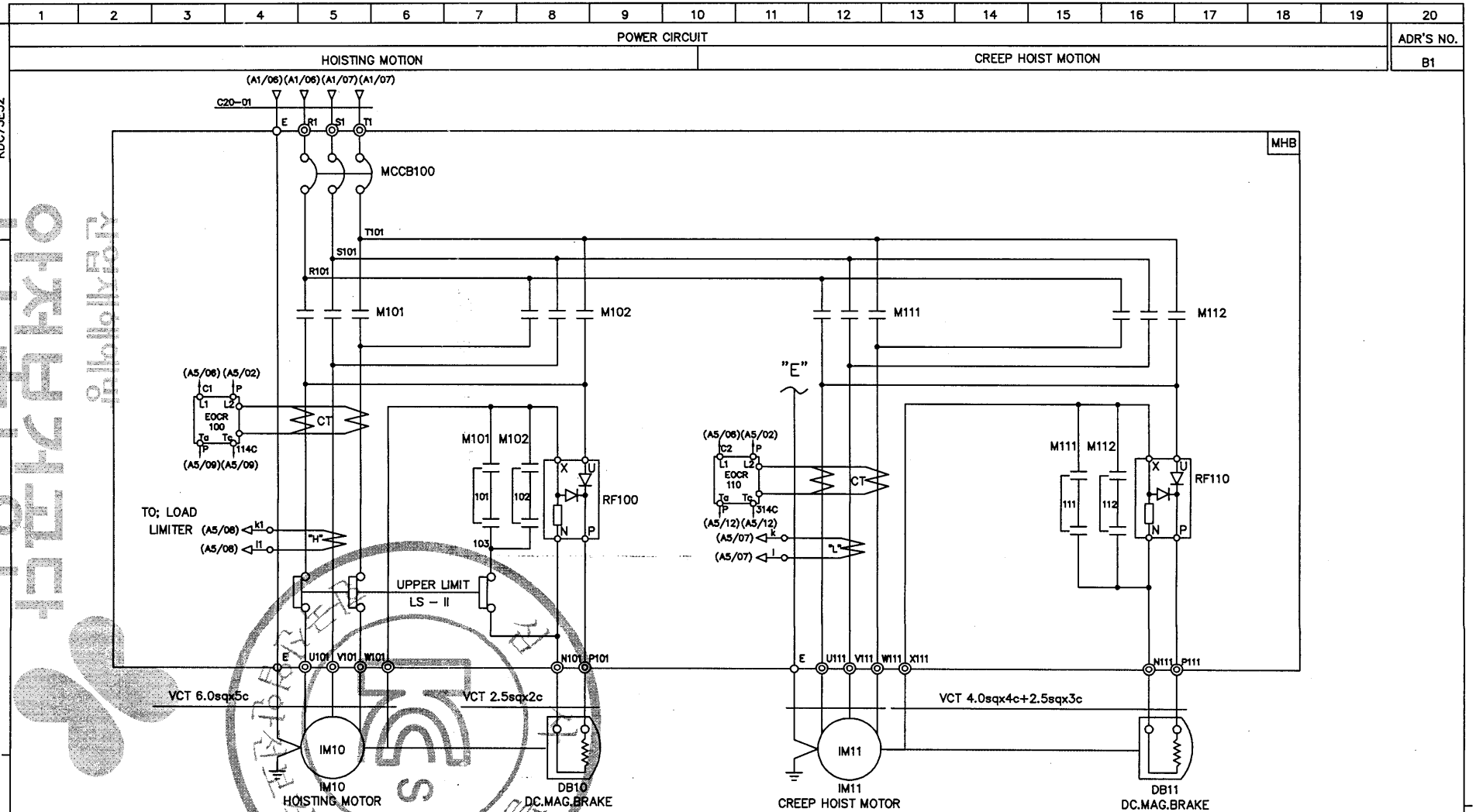

SPECIFICATION / SYMBOLS	HOISTING POWER	HOISTING MOTOR	CREEP MOTOR	DC.MAG BRAKE	NO FUSE BREAKER			MAGNET CONTACTOR		UPPER LIMIT	ELECTRIC OVER CURRENT RELAY		SILICON RECTIFIER		LOAD LIMITER	CABLE
DESCRIPTION	HOIST	IM 10	IM 11	DB10, 11	MCCB100			M101,M102	M111,M112	LS-I, LS-II	EOCR100	EOCR110	RF100	RF110	LOAD LIMITER	C20-01
	7.5TON AC 3PH 460V 60Hz	5.5KW x 6P	1.0KWx6P	DC 100V	DBE-33AF/30A			DOC-48P	DOC-22P	AC 600V 75A	SS-30	SS-05	SR-60	SR-30	JDL-100	VFCT 6.0sqx4c
SELECTION / MAKER	KUKDONG				DAERYUK			DAERYUK		KUKDONG	ASECO				JEUNGHO	DONGIL

MK	DATE	REVISIONS	CHK.	APP.
4				
3				
2				
1				

CUSTOMER		DRAWING	DESIGN	CHECKED	APPROVED	SCALE	DATE	ORDER NO.
DRAWING TITLE	CREEP HOISTING POWER CONTROL CIRCUIT DIAGRAM					NONE		
		국동호이스트 주식회사 KUK DONG HOIST CO., LTD.				DWG. NO	KDC75E52	

불법복제 및 배포금지
KOREA OCCUPATIONAL SAFETY & HEALTH AGENCY
192.168.11.76 / 2013-12-17 15:49:47

불법복제 및 배포금지

KDC75BA61

ADR'S NO.

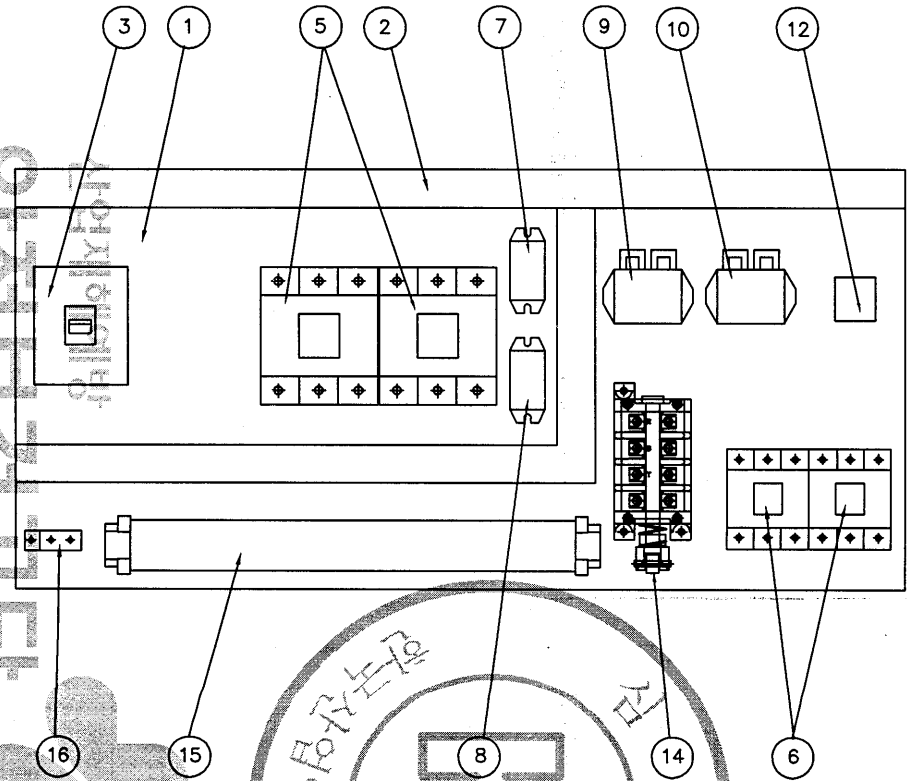

NO	DESCRIPTION	SPECIFICATION	Q'TY	REMARK
1	CHASSIS PLATE		1	아 연 도 금
2	CABLE DUCT	–	1	
3	N.F.B	33AF/30AT	1	HOISTING
4				
5	MAGNET CONTACTOR	DMC48C	2	HOISTING
6	MAGNET CONTACTOR	DMC22C	2	CREEP HOIST
7	SILICON RECTIFIER	SR-60	1	HOISTING
8	SILICON RECTIFIER	SR-30	1	CREEP HOIST
9	E.O.C.R	SS-30	1	HOISTING
10	E.O.C.R	SS-30	1	CREEP HOIST
12	RELAY & SOCKET	4a4b	1	
14	UPPER LIMITER	AC 600V, 75A	1	LS-1,2
15	TERMINAL BLOCK	60A,15A		
16	EARTH TERMINAL	3tx20x50	1	

NOTE

1. UPPER LIMIT LS-1,LS-2의 접점 허용 전류 용량. : AC 600V, 75A
2. POWER SOURCE : AC. 3ø 480V 60HZ
3. EARTH TERMINAL RESISTANCE : 0.018Ω

NOTE

1. 전선의 색상은 다음과 같다.
   1) 흑색 : 교류 및 직류 전원선로
   2) 적색 : 교류제어선
   3) 주황색 : 외부 전원에서 공급되는 연동장치 제어회로
   4) 녹색 또는 녹색과 황색 혼용 : 접지선
   5) 청색 : 직류 제어선로
2. CABLE MATERIAL : KIV OR EQUIVALENT, MIN SIZE : 2.5sq
3. 제어용 전선 : 2.5mm KIV,HIV
4. 제작시 다소 변경 될수있음.
5. 외함 개방구조는 다음과 같을것.
   1) 외함 개방시 충전부분이 차단되도록 할것.
   2) 외함 개방후 충전되어있는 부분은 IP2X 이상의 직접 접촉 방호가 되어있을것.

MK	DATE	REVISIONS	CHK.	APP.
4				
3				
2				
1				

CUSTOMER		DRAWING	DESIGN	CHECKED	APPROVED	SCALE	DATE	ORDER NO.
DRAWING TITLE	CREEP HOIST CONTROL BOX					NONE		
	ARRANGEMENT DRAWING					DWG. NO	KDC75BA61	

192.168.11.76 / 2013-12-17 15:49:47
KOREA OCCUPATIONAL SAFETY & HEALTH AGENCY

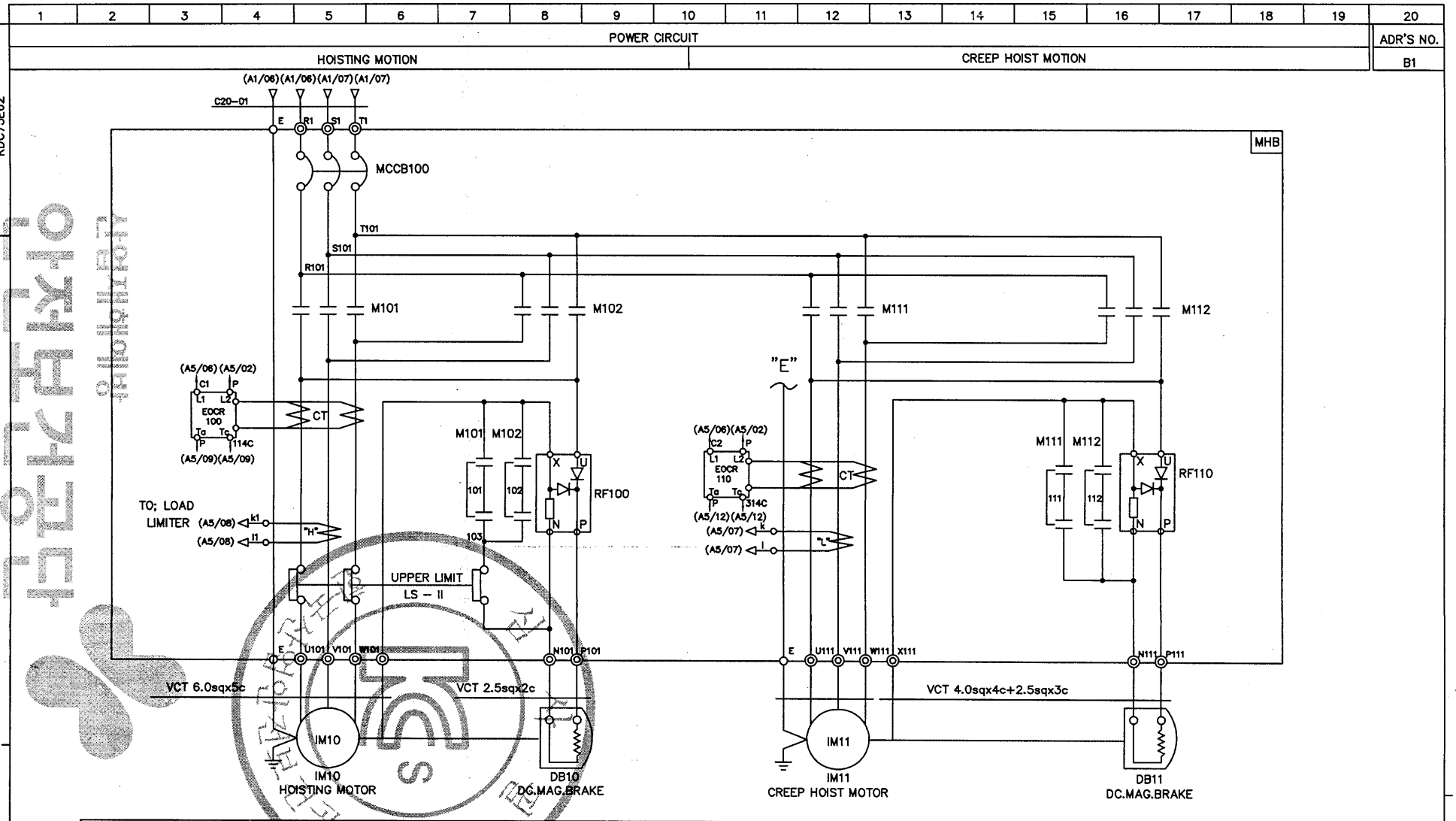

SPECIFICATION / SYMBOLS / DESCRIPTION	HOISTING POWER	HOISTING MOTOR	CREEP MOTOR	DC.MAG. BRAKE	NO FUSE BREAKER			MAGNET CONTACTOR		UPPER LIMIT	ELECTRIC OVER CURRENT RELAY		SILICON RECTIFIER		LOAD LIMITER	CABLE
	HOIST	IM 10	IM 11	DB10, 11	MCCB100			M101,M102	M111,M112	LS-I, LS-II	EOCR100	EOCR110	RF100	RF110	LOAD LIMITER	C20-01
	7.5TON AC 3PH 480V 60Hz	5.5KW x 6P	1.0KWx6P	DC 100V	DBE-33AF/30A			DOC-48P	DOC-22P	AC 600V 75A	SS-30	SS-05	SR-60	SR-30	JDL-100	VFCT 6.0sqx4c
SELECTION / MAKER	KUKDONG				DAERYUK			DAERYUK		KUKDONG	ASECO				JUNGHO	DONGIL

MK	DATE	REVISIONS	CHK.	APP.
4				
3				
2				
1				

CUSTOMER		DRAWING	DESIGN	CHECKED	APPROVED	SCALE	DATE	ORDER NO.
DRAWING TITLE	CREEP HOISTING POWER CONTROL CIRCUIT					NONE		
	DIAGRAM	국동호이스트 주식회사 KUK DONG HOIST CO., LTD.				DWG. NO	KDC75E62	

불법복제 및 배포금지
KOREA OCCUPATIONAL SAFETY & HEALTH AGENCY
192.168.11.76 / 2013-12-17 15:49:47

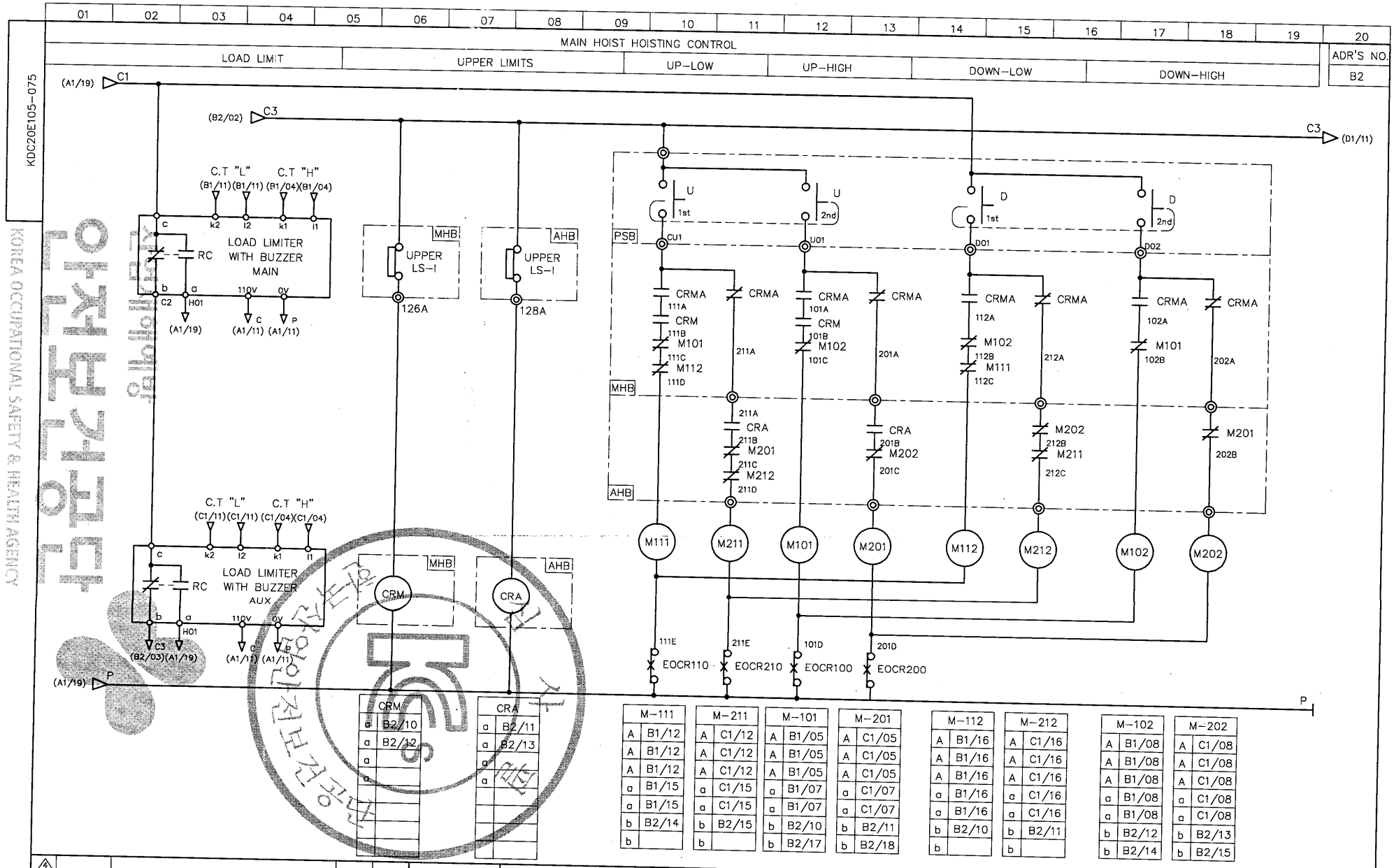

KOREA OCCUPATIONAL SAFETY & HEALTH AGENCY
192.168.11.76 / 2013-12-17 15:49:47
출판물제 및 배포금지

불법복제 및 배포금지

KDC20E106-075

CONTROL CIRCUIT

EAST (LOW SPEED)	WEST (LOW SPEED)	HIGH SPEED	SOUTH	NORTH

ADR'S NO. D2

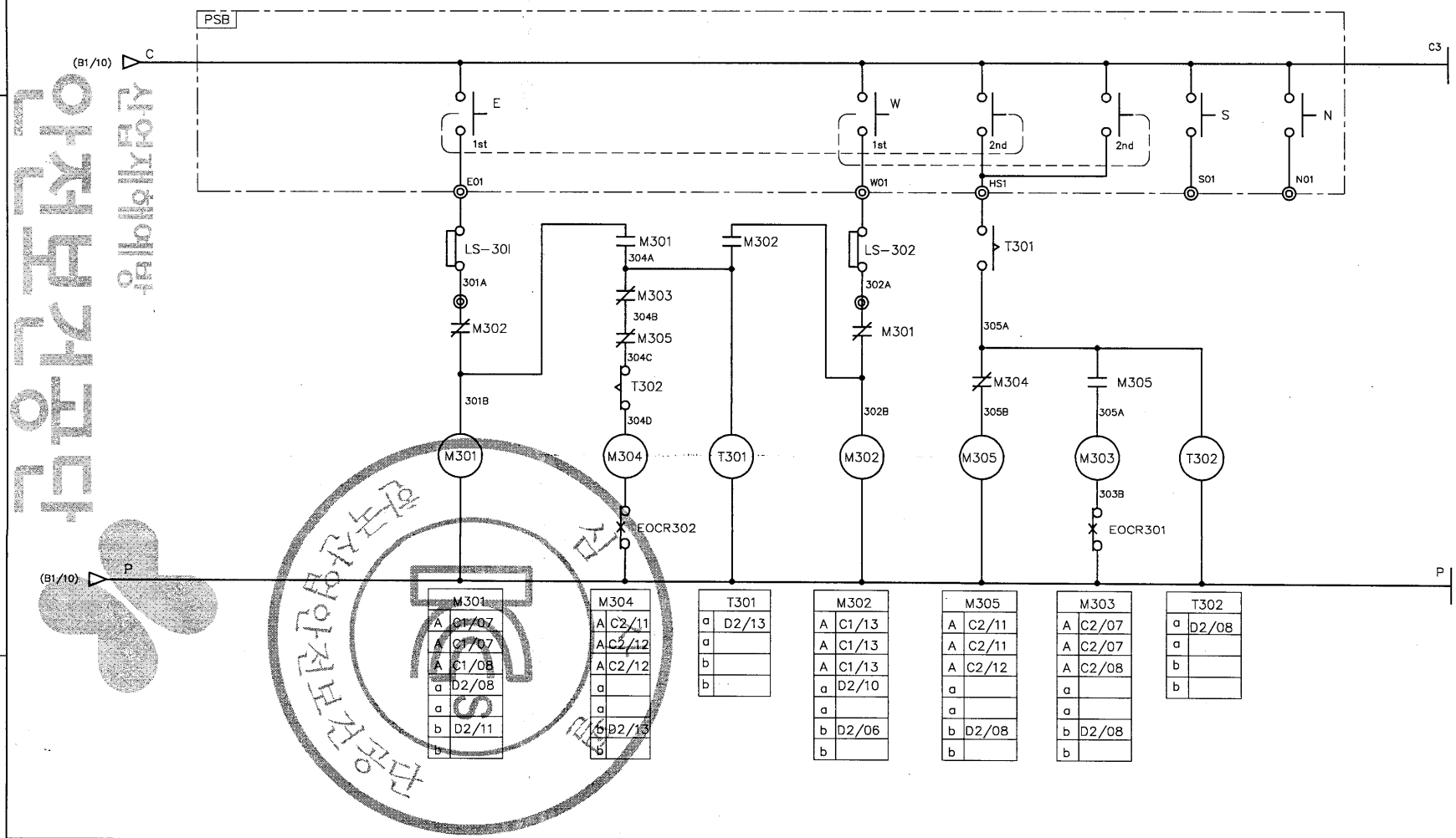

M301	
A	C1/07
A	C1/07
A	C1/08
a	D2/08
a	
b	D2/11
b	

M304	
A	C2/11
A	C2/12
A	C2/12
a	
a	
b	D2/13
b	

T301	
a	D2/13
a	
b	
b	

M302	
A	C1/13
A	C1/13
A	C1/13
a	D2/10
a	
b	D2/06
b	

M305	
A	C2/11
A	C2/11
A	C2/12
a	
a	
b	D2/08
b	

M303	
A	C2/07
A	C2/07
A	C2/08
a	
a	
b	D2/08
b	

T302	
a	D2/08
a	
b	
b	

MK	DATE	REVISIONS	CHK.	APP.
4				
3				
2				
1				

CUSTOMER		DRAWING	DESIGN	CHECKED	APPROVED	SCALE	DATE	ORDER NO.
DRAWING TITLE	MAIN CREEP HOISTING POWER CIRCUIT					NONE		
		국동호이스트 주식회사 KUK DONG HOIST CO., LTD.				DWG. NO	KDC20E106-075	

192.168.11.76 / 2013-12-17 15:49:47
KOREA OCCUPATIONAL SAFETY & HEALTH AGENCY
한국산업안전보건공단
산업재해예방
한국산업안전보건공단

불법복제 및 배포금지

1	2	3	4	5	6	7	8	9	10	11	12	13	14	15	16	17	18	19	20.
CONTROL CIRCUIT																			ADR'S NO.
EAST										WEST		SOUTH		NORTH					D2

KDC20E107-075

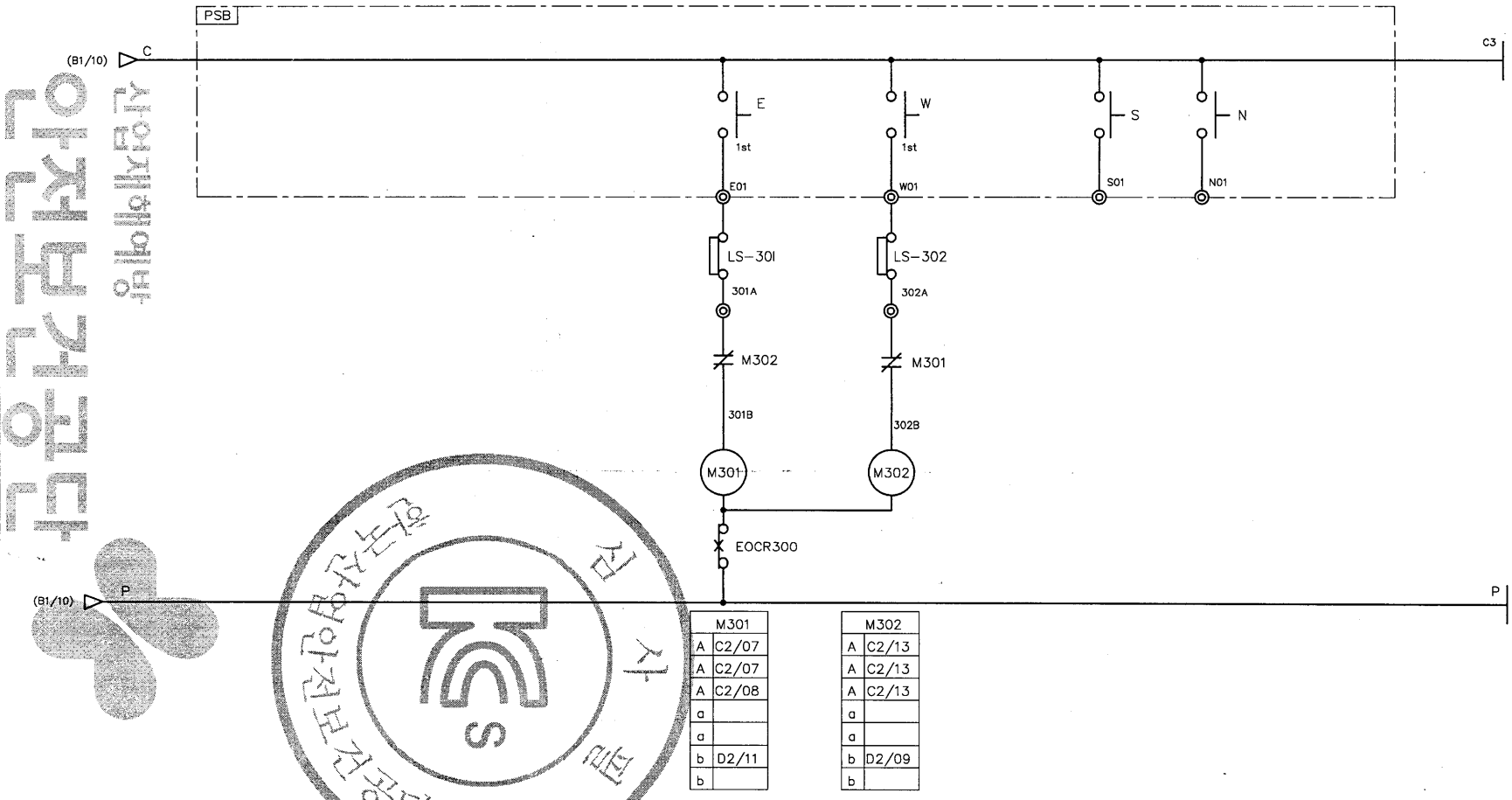

M301	
A	C2/07
A	C2/07
A	C2/08
a	
a	
b	D2/11
b	

M302	
A	C2/13
A	C2/13
A	C2/13
a	
a	
b	D2/09
b	

MK	DATE	REVISIONS	CHK.	APP.
4				
3				
2				
1				

CUSTOMER		DRAWING	DESIGN	CHECKED	APPROVED	SCALE	DATE	ORDER NO.
DRAWING TITLE	MAIN CREEP HOISTING POWER CIRCUIT					NONE		
		국동호이스트 주식회사 KUK DONG HOIST CO., LTD.				DWG. NO	KDC20E107-075	

192.168.11.76 / 2013-12-17 15:49:47
KOREA OCCUPATIONAL SAFETY & HEALTH AGENCY
한국산업안전보건공단
산업재해예방
한국산업안전보건공단 시험성적서

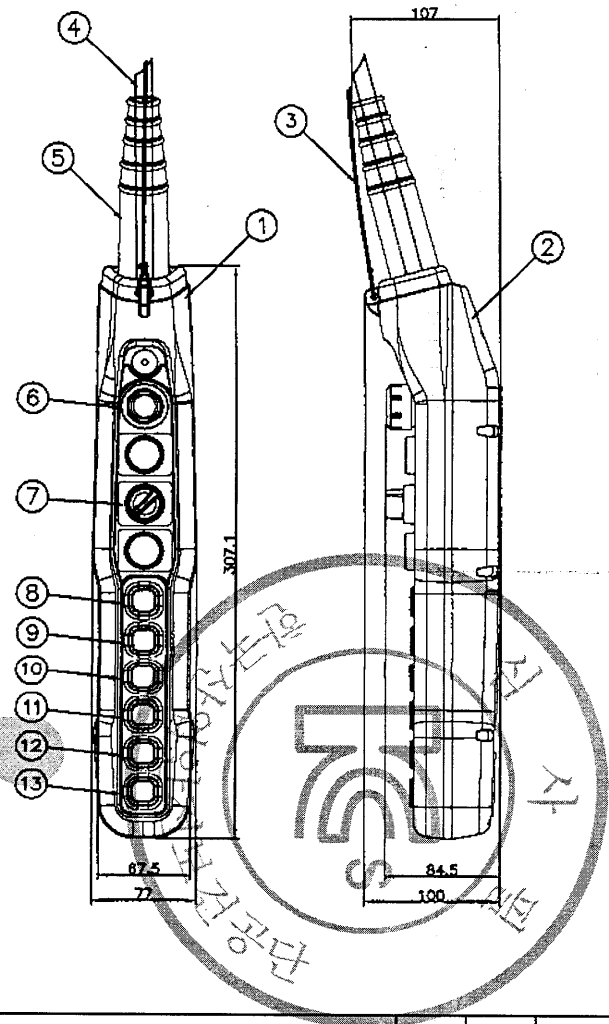

색상 \ 구분	조작버튼	표시등
적색	비상	비상
황색	비정상	비정상
녹색	정상	정상
청색	의무	의무
흰색,회색-흑색	지정된의미없음	기타

NO	DESCRIPTION	NAME	REMARK
1	PUSH BUTTON CASE		
2	PUSH BUTTON COVER		
3	AUX. WIRE		ø2
4	CABLE	VCT 2.0sqx15c	
5	CONNECTOR		RUBBER
6	E.M.B	PUSH BUTTON S/W	RESET TYPE
7	SELECTOR S/W (2 STEP)	PUSH BUTTON S/W	MAIM/AUX
8	HOIST UP	PUSH BUTTON S/W	1 BUTTON 2STEP
9	HOIST DOWN	PUSH BUTTON S/W	1 BUTTON 2STEP
10	EAST	PUSH BUTTON S/W	1 BUTTON 1STEP
11	WEST	PUSH BUTTON S/W	1 BUTTON 1STEP
12	SOUTH	PUSH BUTTON S/W	1 BUTTON 1STEP
13	NORTH	PUSH BUTTON S/W	1 BUTTON 1STEP

*CRANE 설치시 방향표시 BUTTON과 동일하게 표시할것.
* IP 55이상

N O T E

1.BOX MAT ' L : POLYCARBONATE
2.E.S.B 정전용량 : CAPACITY : 3A 250V
3.PROTECTION DEGREE : SPLASH PROOF

3					CUSTOMER		DRAWING	DESIGN	CHECKED	APPROVED	SCALE	DATE
2					DRAWING TITLE	PENDANT PUSH BUTTON SWITCH						
1						LAY.OUT	KD KUK DONG HOIST CO., LTD.			DWG. NO		
MK	DATE	REVISIONS	CHK.	APP.								

한국산업안전보건공단 KOREA OCCUPATIONAL SAFETY & HEALTH AGENCY
192.168.11.76 / 2013-12-17 15:49:47
본 문서는 배포 제한 문서입니다

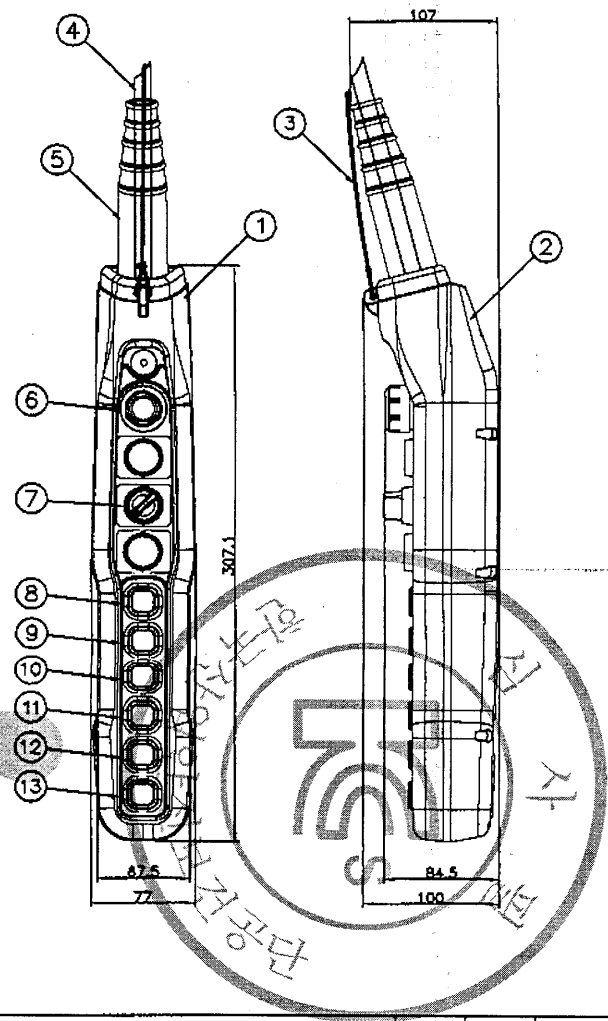

색상 \ 구분	조작버튼	표시등
적색	비상	비상
황색	비정상	비정상
녹색	정상	정상
청색	의무	의무
흰색,회색-흑색	지정된의미없음	기타

NO	DESCRIPTION	NAME	REMARK
1	PUSH BUTTON CASE		
2	PUSH BUTTON COVER		
3	AUX. WIRE		#2
4	CABLE	VCT 2.0sqx15c	
5	CONNECTOR		RUBBER
6	E.M.B	PUSH BUTTON S/W	RESET TYPE
7	SELECTOR S/W (2 STEP)	PUSH BUTTON S/W	MAIM/AUX
8	HOIST UP	PUSH BUTTON S/W	1 BUTTON 2STEP
9	HOIST DOWN	PUSH BUTTON S/W	1 BUTTON 2STEP
10	EAST	PUSH BUTTON S/W	1 BUTTON 2STEP
11	WEST	PUSH BUTTON S/W	1 BUTTON 2STEP
12	SOUTH	PUSH BUTTON S/W	1 BUTTON 1STEP
13	NORTH	PUSH BUTTON S/W	1 BUTTON 1STEP

*CRANE 설치시 방향표시 BUTTON과 동일하게 표시할것.
* IP 55이상

N O T E
1.BOX MAT ' L : POLYCARBONATE
2.E.S.B 정전용량 : CAPACITY : 3A 250V
3.PROTECTION DEGREE : SPLASH PROOF

MK	DATE	REVISIONS	CHK.	APP.
3				
2				
1				

CUSTOMER		DRAWING	DESIGN	CHECKED	APPROVED	SCALE	DATE
DRAWING TITLE	PENDANT PUSH BUTTON SWITCH						
	LAY OUT	KD KUK DONG HOIST CO., LTD.			DWG. NO		

산업재해예방
안전보건공단
KOREA OCCUPATIONAL SAFETY & HEALTH AGENCY
192.168.11.76 / 2013-12-17 15:49:47
불법복제 및 배포금지

불법복제 및 배포금지

4. 참 고 도 서

1 LOAD LIMITER 권고 SETTING 치
2 E.O.C.R 권고 SETTING치
3 MOTOR DATA SHEET
4 WIRE ROPE 성적서
5 SUB VENDOR LIST
6 HOIST 취급설명서
7 과부하 방지장치 취급설명서
8 INVERTER 취급설명서

심사필
KCS
한국산업안전보건공단

산업재해예방
안전보건공단
KOREA OCCUPATIONAL SAFETY & HEALTH AGENCY

192.168.11.76 / 2013-12-17 15:49:47

LOAD LIMITER 권고 SETTING치

* POWER SOURCE : AC 3¢ 220V 60Hz

극동호이스트(주)

HOIST	MOTOR 용량	LOAD LIMITER 권고 SETTING치			LOAD CURRENT		C.T MODEL	연결단자 NO	C.T 용량	REMARK
		LOAD CURRENT	ADJ START TIME	SHOCK TIME	100%	110%				
C15 TON	13KW x 8P	110%	1 SEC	1 SEC	59.0 A	64.0 A	CT-2	K-K1, L-L1	5 V.A	
	1.8KW x 8P	110%	1 SEC	1 SEC	11.0 A	12.7 A	CT-2	K-K1, L-L1	5 V.A	
C20 TON	17KW x 8P	110%	1 SEC	1 SEC	76.6 A	81.9 A	CT-2	K-K1, L-L1	5 V.A	
	1.8KW x 8P	110%	1 SEC	1 SEC	11.0 A	12.7 A	CT-2	K-K1, L-L1	5 V.A	
C30 TON	17KW x 8P	110%	1 SEC	1 SEC	76.6 A	81.9 A	CT-2	K-K1, L-L1	5 V.A	
	1.8KW x 8P	110%	1 SEC	1 SEC	11.0 A	12.7 A	CT-2	K-K1, L-L1	5 V.A	
C35 TON	33KW x 6P	110%	1 SEC	1 SEC	126.6 A	134.2 A	CT-2	K-K1, L-L1	5 V.A	
	3.7KW x 4P	110%	1 SEC	1 SEC	16.0 A	17.8 A	CT-2	K-K1, L-L1	5 V.A	
C40 TON	33KW x 6P	110%	1 SEC	1 SEC	126.6 A	134.2 A	CT-2	K-K1, L-L1	5 V.A	
	3.7KW x 4P	110%	1 SEC	1 SEC	16.0 A	17.8 A	CT-2	K-K1, L-L1	5 V.A	
C50 TON	33KW x 6P	110%	1 SEC	1 SEC	126.6 A	134.2 A	CT-2	K-K1, L-L1	5 V.A	
	3.7KW x 4P	110%	1 SEC	1 SEC	16.0 A	17.8 A	CT-2	K-K1, L-L1	5 V.A	
C60 TON	33KW x 6P	110%	1 SEC	1 SEC	126.6 A	134.2 A	CT-2	K-K1, L-L1	5 V.A	
	3.7KW x 4P	110%	1 SEC	1 SEC	16.0 A	17.8 A	CT-2	K-K1, L-L1	5 V.A	
C70 TON	33KW x 6P	110%	1 SEC	1 SEC	126.6 A	134.2 A	CT-2	K-K1, L-L1	5 V.A	
	3.7KW x 4P	110%	1 SEC	1 SEC	16.0 A	17.8 A	CT-2	K-K1, L-L1	5 V.A	

NOTE

1. 상기 TABLE의 수치는 권고 SETTING 수치이며 MOTOR의 특성 및 현장 조건에 따라 변경 가능함.

192.168.11.76 / 2013-12-17 15:49:47
KOREA OCCUPATIONAL SAFETY & HEALTH AGENCY
무단배포 및 재배포 금지

LOAD LIMITER 권고 SETTING치

* POWER SOURCE : AC 3¢ 380V 60Hz

극동호이스트(주)

HOIST	MOTOR 용량	LOAD LIMITER 권고 SETTING치			LOAD CURRENT		C.T MODEL	연결단자 NO	C.T 용량	REMARK
		LOAD CURRENT	ADJ START TIME	SHOCK TIME	100%	110%				
C15 TON	13KW x 8P	110%	1 SEC	1 SEC	35.0 A	37.2 A	CT-2	K-K1, L-L1	5 V.A	
	1.8KW x 8P	110%	1 SEC	1 SEC	6.4 A	7.9 A	CT-2	K-K1, L-L1	5 V.A	
C20 TON	17KW x 8P	110%	1 SEC	1 SEC	44.3 A	48.6 A	CT-2	K-K1, L-L1	5 V.A	
	1.8KW x 8P	110%	1 SEC	1 SEC	6.4 A	7.9 A	CT-2	K-K1, L-L1	5 V.A	
C30 TON	17KW x 8P	110%	1 SEC	1 SEC	44.3 A	48.6 A	CT-2	K-K1, L-L1	5 V.A	
	1.8KW x 8P	110%	1 SEC	1 SEC	6.4 A	7.9 A	CT-2	K-K1, L-L1	5 V.A	
C35 TON	33KW x 6P	110%	1 SEC	1 SEC	77.3 A	82.8 A	CT-2	K-K1, L-L1	5 V.A	
	3.7KW x 4P	110%	1 SEC	1 SEC	9.3 A	11.3 A	CT-2	K-K1, L-L1	5 V.A	
C40 TON	33KW x 6P	110%	1 SEC	1 SEC	77.3 A	82.8 A	CT-2	K-K1, L-L1	5 V.A	
	3.7KW x 4P	110%	1 SEC	1 SEC	9.3 A	11.3 A	CT-2	K-K1, L-L1	5 V.A	
C50 TON	33KW x 6P	110%	1 SEC	1 SEC	77.3 A	82.8 A	CT-2	K-K1, L-L1	5 V.A	
	3.7KW x 4P	110%	1 SEC	1 SEC	9.3 A	11.3 A	CT-2	K-K1, L-L1	5 V.A	
C60 TON	33KW x 6P	110%	1 SEC	1 SEC	77.3 A	82.8 A	CT-2	K-K1, L-L1	5 V.A	
	3.7KW x 4P	110%	1 SEC	1 SEC	9.3 A	11.3 A	CT-2	K-K1, L-L1	5 V.A	
C70 TON	33KW x 6P	110%	1 SEC	1 SEC	77.3 A	82.8 A	CT-2	K-K1, L-L1	5 V.A	
	3.7KW x 4P	110%	1 SEC	1 SEC	9.3 A	11.3 A	CT-2	K-K1, L-L1	5 V.A	

NOTE

1. 상기 TABLE의 수치는 권고 SETTING 수치이며 MOTOR의 특성 및 현장 조건에 따라 변경 가능함.

무단 배포 및 복제 금지

192.168.11.76 / 2013-12-17 15:49:47

KOREA OCCUPATIONAL SAFETY & HEALTH AGENCY

LOAD LIMITER 권고 SETTING치

* POWER SOURCE : AC 3¢ 440V 60Hz

극동호이스트(주)

HOIST	MOTOR 용량	LOAD LIMITER 권고 SETTING치			LOAD CURRENT		C.T MODEL	연결단자 NO	C.T 용량	REMARK
		LOAD CURRENT	ADJ START TIME	SHOCK TIME	100%	110%				
C15 TON	13KW x 8P	110%	1 SEC	1 SEC	29.5 A	32.6 A	CT-2	K-K1, L-L1	5 V.A	
	1.8KW x 8P	110%	1 SEC	1 SEC	5.5 A	7.0 A	CT-2	K-K1, L-L1	5 V.A	
C20 TON	17KW x 8P	110%	1 SEC	1 SEC	38.3 A	42.6 A	CT-2	K-K1, L-L1	5 V.A	
	1.8KW x 8P	110%	1 SEC	1 SEC	5.5 A	7.0 A	CT-2	K-K1, L-L1	5 V.A	
C30 TON	17KW x 8P	110%	1 SEC	1 SEC	38.3 A	42.6 A	CT-2	K-K1, L-L1	5 V.A	
	1.8KW x 8P	110%	1 SEC	1 SEC	5.5 A	7.0 A	CT-2	K-K1, L-L1	5 V.A	
C35 TON	33KW x 6P	110%	1 SEC	1 SEC	63.3 A	68.6 A	CT-2	K-K1, L-L1	5 V.A	
	3.7KW x 4P	110%	1 SEC	1 SEC	8.0 A	10.8 A	CT-2	K-K1, L-L1	5 V.A	
C40 TON	33KW x 6P	110%	1 SEC	1 SEC	63.3 A	68.6 A	CT-2	K-K1, L-L1	5 V.A	
	3.7KW x 4P	110%	1 SEC	1 SEC	8.0 A	10.8 A	CT-2	K-K1, L-L1	5 V.A	
C50 TON	33KW x 6P	110%	1 SEC	1 SEC	63.3 A	68.6 A	CT-2	K-K1, L-L1	5 V.A	
	3.7KW x 4P	110%	1 SEC	1 SEC	8.0 A	10.8 A	CT-2	K-K1, L-L1	5 V.A	
C60 TON	33KW x 6P	110%	1 SEC	1 SEC	63.3 A	68.6 A	CT-2	K-K1, L-L1	5 V.A	
	3.7KW x 4P	110%	1 SEC	1 SEC	8.0 A	10.8 A	CT-2	K-K1, L-L1	5 V.A	
C70 TON	33KW x 6P	110%	1 SEC	1 SEC	63.3 A	68.6 A	CT-2	K-K1, L-L1	5 V.A	
	3.7KW x 4P	110%	1 SEC	1 SEC	8.0 A	10.8 A	CT-2	K-K1, L-L1	5 V.A	

NOTE

1. 상기 TABLE의 수치는 권고 SETTING 수치이며 MOTOR의 특성 및 현장 조건에 따라 변경 가능함.

불법복제 및 배포금지

192.168.11.76 / 2013-12-17 15:49:47

KOREA OCCUPATIONAL SAFETY & HEALTH AGENCY

LOAD LIMITER 권고 SETTING치

* POWER SOURCE : AC 3Φ 460V 60Hz

극동호이스트(주)

HOIST	MOTOR 용량	LOAD LIMITER 권고 SETTING치			LOAD CURRENT		C.T MODEL	연결단자 NO	C.T 용량	REMARK
		LOAD CURRENT	ADJ START TIME	SHOCK TIME	100%	110%				
C15 TON	13KW x 8P	110%	1 SEC	1 SEC	28.4 A	31.3 A	CT-2	K-K1, L-L1	5 V.A	
	1.8KW x 8P	110%	1 SEC	1 SEC	5.5 A	7.0 A	CT-2	K-K1, L-L1	5 V.A	
C20 TON	17KW x 8P	110%	1 SEC	1 SEC	36.7 A	40.4 A	CT-2	K-K1, L-L1	5 V.A	
	1.8KW x 8P	110%	1 SEC	1 SEC	5.5 A	7.0 A	CT-2	K-K1, L-L1	5 V.A	
C30 TON	17KW x 8P	110%	1 SEC	1 SEC	36.7 A	40.4 A	CT-2	K-K1, L-L1	5 V.A	
	1.8KW x 8P	110%	1 SEC	1 SEC	5.3 A	7.0 A	CT-2	K-K1, L-L1	5 V.A	
C35 TON	33KW x 6P	110%	1 SEC	1 SEC	60.5 A	65.5 A	CT-2	K-K1, L-L1	5 V.A	
	3.7KW x 4P	110%	1 SEC	1 SEC	7.7 A	8.5 A	CT-2	K-K1, L-L1	5 V.A	
C40 TON	33KW x 6P	110%	1 SEC	1 SEC	60.5 A	65.5 A	CT-2	K-K1, L-L1	5 V.A	
	3.7KW x 4P	110%	1 SEC	1 SEC	7.7 A	8.5 A	CT-2	K-K1, L-L1	5 V.A	
C50 TON	33KW x 6P	110%	1 SEC	1 SEC	60.5 A	65.5 A	CT-2	K-K1, L-L1	5 V.A	
	3.7KW x 4P	110%	1 SEC	1 SEC	7.7 A	8.5 A	CT-2	K-K1, L-L1	5 V.A	
C60 TON	33KW x 6P	110%	1 SEC	1 SEC	60.5 A	65.5 A	CT-2	K-K1, L-L1	5 V.A	
	3.7KW x 4P	110%	1 SEC	1 SEC	7.7 A	8.5 A	CT-2	K-K1, L-L1	5 V.A	
C70 TON	33KW x 6P	110%	1 SEC	1 SEC	60.5 A	65.5 A	CT-2	K-K1, L-L1	5 V.A	
	3.7KW x 4P	110%	1 SEC	1 SEC	7.7 A	8.5 A	CT-2	K-K1, L-L1	5 V.A	

NOTE

1. 상기 TABLE의 수치는 권고 SETTING 수치이며 MOTOR의 특성 및 현장 조건에 따라 변경 가능함.

불법복제 및 배포금지

192.168.11.76 / 2013-12-17 15:49:47

KOREA OCCUPATIONAL SAFETY & HEALTH AGENCY

LOAD LIMITER 권고 SETTING치

* POWER SOURCE : AC 3¢ 480V 60Hz

극동호이스트(주)

HOIST	MOTOR 용량	LOAD LIMITER 권고 SETTING치			LOAD CURRENT		C.T MODEL	연결단자 NO	C.T 용량	REMARK
		LOAD CURRENT	ADJ START TIME	SHOCK TIME	100%	110%				
C15 TON	13KW x 8P	110%	1 SEC	1 SEC	27.2 A	30.0 A	CT-2	K-K1, L-L1	5 V.A	
	1.8KW x 8P	110%	1 SEC	1 SEC	5.5 A	7.0 A	CT-2	K-K1, L-L1	5 V.A	
C20 TON	17KW x 8P	110%	1 SEC	1 SEC	35.2 A	38.7 A	CT-2	K-K1, L-L1	5 V.A	
	1.8KW x 8P	110%	1 SEC	1 SEC	5.5 A	7.0 A	CT-2	K-K1, L-L1	5 V.A	
C30 TON	17KW x 8P	110%	1 SEC	1 SEC	35.2 A	38.7 A	CT-2	K-K1, L-L1	5 V.A	
	1.8KW x 8P	110%	1 SEC	1 SEC	5.1 A	7.0 A	CT-2	K-K1, L-L1	5 V.A	
C35 TON	33KW x 6P	110%	1 SEC	1 SEC	58.0 A	62.8 A	CT-2	K-K1, L-L1	5 V.A	
	3.7KW x 4P	110%	1 SEC	1 SEC	7.3 A	8.2 A	CT-2	K-K1, L-L1	5 V.A	
C40 TON	33KW x 6P	110%	1 SEC	1 SEC	58.0 A	62.8 A	CT-2	K-K1, L-L1	5 V.A	
	3.7KW x 4P	110%	1 SEC	1 SEC	7.3 A	8.2 A	CT-2	K-K1, L-L1	5 V.A	
C50 TON	33KW x 6P	110%	1 SEC	1 SEC	58.0 A	62.8 A	CT-2	K-K1, L-L1	5 V.A	
	3.7KW x 4P	110%	1 SEC	1 SEC	7.3 A	8.2 A	CT-2	K-K1, L-L1	5 V.A	
C60 TON	33KW x 6P	110%	1 SEC	1 SEC	58.0 A	62.8 A	CT-2	K-K1, L-L1	5 V.A	
	3.7KW x 4P	110%	1 SEC	1 SEC	7.3 A	8.2 A	CT-2	K-K1, L-L1	5 V.A	
C70 TON	33KW x 6P	110%	1 SEC	1 SEC	58.0 A	62.8 A	CT-2	K-K1, L-L1	5 V.A	
	3.7KW x 4P	110%	1 SEC	1 SEC	7.3 A	8.2 A	CT-2	K-K1, L-L1	5 V.A	

NOTE

1. 상기 TABLE의 수치는 권고 SETTING 수치이며 MOTOR의 특성 및 현장 조건에 따라 변경 가능함.

무단배포 및 복제금지

KOREA OCCUPATIONAL SAFETY & HEALTH AGENCY

192.168.11.76 / 2013-12-17 15:49:47

E.O.C.R 권고 SETTING치

* POWER SOURCE : AC 3Φ 220V 60Hz

극동호이스트(주)

HOIST	MOTOR 용량	MOTOR 정격 전류	DRIVE TYPE	E.O.C.R TYPE	권고 SETTING 치			REMARK
					DELAY TIME	OPERATION TIME	CURRENT	
C15 TON	13KW x 8P	59.0 A	1 DRAVE	SS-60	3 SEC	1 SEC	59.0 A	
	1.8KW x 8P	11.0 A	1 DRAVE	SS-30	3 SEC	1 SEC	11.0 A	
C20 TON	17KW x 8P	76.6 A	1 DRAVE	SS-100	3 SEC	1 SEC	76.6 A	
	1.8KW x 8P	11.0 A	1 DRAVE	SS-30	3 SEC	1 SEC	11.0 A	
C30 TON	17KW x 8P	76.6 A	1 DRAVE	SS-100	3 SEC	1 SEC	76.6 A	
	1.8KW x 8P	11.0 A	1 DRAVE	SS-30	3 SEC	1 SEC	11.0 A	
C35 TON	33KW x 6P	126.6 A	1 DRAVE	SS-130	3 SEC	1 SEC	126.6 A	
	3.7KW x 4P	16.0 A	1 DRAVE	SS-30	3 SEC	1 SEC	16.0 A	
C40 TON	33KW x 6P	126.6 A	1 DRAVE	SS-130	3 SEC	1 SEC	126.6 A	
	3.7KW x 4P	16.0 A	1 DRAVE	SS-30	3 SEC	1 SEC	16.0 A	
C50TON	33KW x 6P	126.6 A	1 DRAVE	SS-130	3 SEC	1 SEC	126.6 A	
	3.7KW x 4P	16.0 A	1 DRAVE	SS-30	3 SEC	1 SEC	16.0 A	
C60 TON	33KW x 6P	126.6 A	1 DRAVE	SS-130	3 SEC	1 SEC	126.6 A	
	3.7KW x 4P	16.0 A	1 DRAVE	SS-30	3 SEC	1 SEC	16.0 A	
C70 TON	33KW x 6P	126.6 A	1 DRAVE	SS-130	3 SEC	1 SEC	126.6 A	
	3.7KW x 4P	16.0 A	1 DRAVE	SS-30	3 SEC	1 SEC	16.0 A	

NOTE

1. 상기 TABLE의 수치는 권고 SETTING 수치이며 MOTOR의 특성 및 현장 조건에 따라 변경 가능함.

불법복제 및 배포금지

192.168.11.76 / 2013-12-17 15:49:47

KOREA OCCUPATIONAL SAFETY & HEALTH AGENCY

E.O.C.R 권고 SETTING치

* POWER SOURCE : AC 3Φ 380V 60Hz

극동호이스트(주)

HOIST	MOTOR 용량	1 정격 전류	DRIVE TYPE	E.O.C.R TYPE	권고 SETTING 치			REMARK
					DELAY TIME	OPERATION TIME	CURRENT	
C15 TON	13KW x 8P	35.0 A	1 DRAVE	SS-60	3 SEC	1 SEC	35.0 A	
	1.8KW x 8P	6.4 A	1 DRAVE	SS-30	3 SEC	1 SEC	6.4 A	
C20 TON	17KW x 8P	44.3 A	1 DRAVE	SS-60	3 SEC	1 SEC	44.3 A	
	1.8KW x 8P	6.4 A	1 DRAVE	SS-30	3 SEC	1 SEC	6.4 A	
C30 TON	17KW x 8P	44.3 A	1 DRAVE	SS-60	3 SEC	1 SEC	44.3 A	
	1.8KW x 8P	6.4 A	1 DRAVE	SS-30	3 SEC	1 SEC	6.4 A	
C35 TON	33KW x 6P	77.3 A	1 DRAVE	SS-100	3 SEC	1 SEC	77.3 A	
	3.7KW x 4P	9.3 A	1 DRAVE	SS-30	3 SEC	1 SEC	9.3 A	
C40 TON	33KW x 6P	77.3 A	1 DRAVE	SS-100	3 SEC	1 SEC	77.3 A	
	3.7KW x 4P	9.3 A	1 DRAVE	SS-30	3 SEC	1 SEC	9.3 A	
C50 TON	33KW x 6P	77.3 A	1 DRAVE	SS-100	3 SEC	1 SEC	77.3 A	
	3.7KW x 4P	9.3 A	1 DRAVE	SS-30	3 SEC	1 SEC	9.3 A	
C60 TON	33KW x 6P	77.3 A	1 DRAVE	SS-100	3 SEC	1 SEC	77.3 A	
	3.7KW x 4P	9.3 A	1 DRAVE	SS-30	3 SEC	1 SEC	9.3 A	
C70 TON	33KW x 6P	77.3 A	1 DRAVE	SS-100	3 SEC	1 SEC	77.3 A	
	3.7KW x 4P	9.3 A	1 DRAVE	SS-30	3 SEC	1 SEC	9.3 A	

NOTE

1. 상기 TABLE의 수치는 권고 SETTING 수치이며 MOTOR의 특성 및 현장 조건에 따라 변경 가능함.

KOREA OCCUPATIONAL SAFETY & HEALTH AGENCY
192.168.11.76 / 2013-12-17 15:49:47
무단 배포 및 복제 금지

E.O.C.R 권고 SETTING치

* POWER SOURCE : AC 3¢ 440V 60Hz

극동호이스트(주)

HOIST	MOTOR 용량	MOTOR 정격 전류	DRIVE TYPE	E.O.C.R TYPE	권고 SETTING 치			REMARK
					DELAY TIME	OPERATION TIME	CURRENT	
C15 TON	13KW x 8P	29.5 A	1 DRAVE	SS-30	3 SEC	1 SEC	29.5 A	
	1.8KW x 8P	5.5 A	1 DRAVE	SS-30	3 SEC	1 SEC	5.5 A	
C20 TON	17KW x 8P	38.3 A	1 DRAVE	SS-60	3 SEC	1 SEC	38.3 A	
	1.8KW x 8P	5.5 A	1 DRAVE	SS-30	3 SEC	1 SEC	5.5 A	
C30 TON	17KW x 8P	38.3 A	1 DRAVE	SS-60	3 SEC	1 SEC	38.3 A	
	1.8KW x 8P	5.5 A	1 DRAVE	SS-30	3 SEC	1 SEC	5.5 A	
C35 TON	33KW x 6P	63.3 A	1 DRAVE	SS-100	3 SEC	1 SEC	63.3 A	
	3.7KW x 4P	8.0 A	1 DRAVE	SS-30	3 SEC	1 SEC	8.0 A	
C40 TON	33KW x 6P	63.3 A	1 DRAVE	SS-100	3 SEC	1 SEC	63.3 A	
	3.7KW x 4P	8.0 A	1 DRAVE	SS-30	3 SEC	1 SEC	8.0 A	
C50 TON	33KW x 6P	63.3 A	1 DRAVE	SS-100	3 SEC	1 SEC	63.3 A	
	3.7KW x 4P	8.0 A	1 DRAVE	SS-30	3 SEC	1 SEC	8.0 A	
C60 TON	33KW x 6P	63.3 A	1 DRAVE	SS-100	3 SEC	1 SEC	63.3 A	
	3.7KW x 4P	8.0 A	1 DRAVE	SS-30	3 SEC	1 SEC	8.0 A	
C70 TON	33KW x 6P	63.3 A	1 DRAVE	SS-100	3 SEC	1 SEC	63.3 A	
	3.7KW x 4P	8.0 A	1 DRAVE	SS-30	3 SEC	1 SEC	8.0 A	

NOTE

1. 상기 TABLE의 수치는 권고 SETTING 수치이며 MOTOR의 특성 및 현장 조건에 따라 변경 가능함.

불법복제 및 배포금지

KOREA OCCUPATIONAL SAFETY & HEALTH AGENCY
192.168.11.76 / 2013-12-17 15:49:47

E.O.C.R 권고 SETTING치

* POWER SOURCE : AC 3Φ 460V 60Hz

극동호이스트(주)

HOIST	MOTOR 용량	MOTOR 정격 전류	DRIVE TYPE	E.O.C.R TYPE	권고 SETTING 치			REMARK
					DELAY TIME	OPERATION TIME	CURRENT	
C15 TON	13KW x 8P	29.5 A	1 DRAVE	SS-30	3 SEC	1 SEC	29.5 A	
	1.8KW x 8P	5.5 A	1 DRAVE	SS-30	3 SEC	1 SEC	5.5 A	
C20 TON	17KW x 8P	38.3 A	1 DRAVE	SS-60	3 SEC	1 SEC	38.3 A	
	1.8KW x 8P	5.5 A	1 DRAVE	SS-30	3 SEC	1 SEC	5.5 A	
C30 TON	17KW x 8P	36.7 A	1 DRAVE	SS-60	3 SEC	1 SEC	36.7 A	
	1.8KW x 8P	5.3 A	1 DRAVE	SS-30	3 SEC	1 SEC	5.3 A	
C35 TON	33KW x 6P	60.5 A	1 DRAVE	SS-100	3 SEC	1 SEC	60.5 A	
	3.7KW x 4P	7.7 A	1 DRAVE	SS-30	3 SEC	1 SEC	7.7 A	
C40 TON	33KW x 6P	60.5 A	1 DRAVE	SS-100	3 SEC	1 SEC	60.5 A	
	3.7KW x 4P	7.7 A	1 DRAVE	SS-30	3 SEC	1 SEC	7.7 A	
C50 TON	33KW x 6P	60.5 A	1 DRAVE	SS-100	3 SEC	1 SEC	60.5 A	
	3.7KW x 4P	7.7 A	1 DRAVE	SS-30	3 SEC	1 SEC	7.7 A	
C60 TON	33KW x 6P	60.5 A	1 DRAVE	SS-100	3 SEC	1 SEC	60.5 A	
	3.7KW x 4P	7.7 A	1 DRAVE	SS-30	3 SEC	1 SEC	7.7 A	
C70 TON	33KW x 6P	60.5 A	1 DRAVE	SS-100	3 SEC	1 SEC	60.5 A	
	3.7KW x 4P	7.7 A	1 DRAVE	SS-30	3 SEC	1 SEC	7.7 A	

NOTE

1. 상기 TABLE의 수치는 권고 SETTING 수치이며 MOTOR의 특성 및 현장 조건에 따라 변경 가능함.

KOREA OCCUPATIONAL SAFETY & HEALTH AGENCY
192.168.11.76 / 2013-12-17 15:49:47
무단 배포 및 복제 금지

E.O.C.R 권고 SETTING치

* POWER SOURCE : AC 3Φ 480V 60Hz

극동호이스트(주)

HOIST	MOTOR 용량	MOTOR 정격 전류	DRIVE TYPE	E.O.C.R TYPE	권고 SETTING 치			REMARK
					DELAY TIME	OPERATION TIME	CURRENT	
C15 TON	13KW x 8P	29.5 A	1 DRAVE	SS-30	3 SEC	1 SEC	29.5 A	
	1.8KW x 8P	5.5 A	1 DRAVE	SS-30	3 SEC	1 SEC	5.5 A	
C20 TON	17KW x 8P	38.3 A	1 DRAVE	SS-60	3 SEC	1 SEC	38.3 A	
	1.8KW x 8P	5.5 A	1 DRAVE	SS-30	3 SEC	1 SEC	5.5 A	
C30 TON	17KW x 8P	35.2 A	1 DRAVE	SS-60	3 SEC	1 SEC	35.2 A	
	1.8KW x 8P	5.1 A	1 DRAVE	SS-30	3 SEC	1 SEC	5.1 A	
C35 TON	33KW x 6P	58.0 A	1 DRAVE	SS-60	3 SEC	1 SEC	58.0 A	
	3.7KW x 4P	7.3 A	1 DRAVE	SS-30	3 SEC	1 SEC	7.3 A	
C40 TON	33KW x 6P	58.0 A	1 DRAVE	SS-60	3 SEC	1 SEC	58.0 A	
	3.7KW x 4P	7.3 A	1 DRAVE	SS-30	3 SEC	1 SEC	7.3 A	
C650 TON	33KW x 6P	58.0 A	1 DRAVE	SS-60	3 SEC	1 SEC	58.0 A	
	3.7KW x 4P	7.3 A	1 DRAVE	SS-30	3 SEC	1 SEC	7.3 A	
C60 TON	33KW x 6P	58.0 A	1 DRAVE	SS-60	3 SEC	1 SEC	58.0 A	
	3.7KW x 4P	7.3 A	1 DRAVE	SS-30	3 SEC	1 SEC	7.3 A	
C70 TON	33KW x 6P	58.0 A	1 DRAVE	SS-60	3 SEC	1 SEC	58.0 A	
	3.7KW x 4P	7.3 A	1 DRAVE	SS-30	3 SEC	1 SEC	7.3 A	

NOTE

1. 상기 TABLE의 수치는 권고 SETTING 수치이며 MOTOR의 특성 및 현장 조건에 따라 변경 가능함.

KOREA OCCUPATIONAL SAFETY & HEALTH AGENCY
192.168.11.76 / 2013-12-17 15:49:47
불법복제 및 배포금지

LOAD LIMITER 권고 SETTING치

* POWER SOURCE : AC 3¢ 220V 60Hz

극동호이스트(주)

HOIST	MOTOR 용량	LOAD LIMITER 권고 SETTING치			LOAD CURRENT		C.T MODEL	연결단자 NO	C.T 용량	REMARK
		LOAD CURRENT	ADJ START TIME	SHOCK TIME	100%	110%				
C1 TON	2.4KW x 4P	110%	1 SEC	1 SEC	10 A	11.2 A	CT-2	K-K1, L-L1	5 V.A	
	0.4KW x 4P	110%	1 SEC	1 SEC	2.7 A	3.1 A	CT-1	K-K1, L-L1	5 V.A	
C2 TON	3.7KW x 4P	110%	1 SEC	1 SEC	16.0 A	17.4 A	CT-2	K-K1, L-L1	5 V.A	
	0.4KW x 4P	110%	1 SEC	1 SEC	2.7 A	3.1 A	CT-1	K-K1, L-L1	5 V.A	
C2.8 TON	5.0KW x 4P	110%	1 SEC	1 SEC	22.8 A	24.2 A	CT-2	K-K1, L-L1	5 V.A	
	1.5KW x 4P	110%	1 SEC	1 SEC	7.3 A	8.3 A	CT-1	K-K1, L-L1	5 V.A	
C3 TON	5.5KW x 4P	110%	1 SEC	1 SEC	22.8 A	24.3 A	CT-2	K-K1, L-L1	5 V.A	
	1.5KW x 4P	110%	1 SEC	1 SEC	7.3 A	8.3 A	CT-1	K-K1, L-L1	5 V.A	
C5 TON	5.5KW x 6P	110%	1 SEC	1 SEC	28.2 A	30.1 A	CT-2	K-K1, L-L1	5 V.A	
	1.0KW x 6P	110%	1 SEC	1 SEC	6.7 A	8.1 A	CT-1	K-K1, L-L1	5 V.A	
C7.5 TON	5.5KW x 6P	110%	1 SEC	1 SEC	28.2 A	30.1 A	CT-2	K-K1, L-L1	5 V.A	
	1.0KW x 6P	110%	1 SEC	1 SEC	6.7 A	8.1 A	CT-1	K-K1, L-L1	5 V.A	
C10 TON	9.0KW x 8P	110%	1 SEC	1 SEC	45.0 A	49.1 A	CT-2	K-K1, L-L1	5 V.A	
	1.1KW x 8P	110%	1 SEC	1 SEC	8.0 A	9.6 A	CT-2	K-K1, L-L1	5 V.A	

NOTE

1. 상기 TABLE의 수치는 권고 SETTING 수치이며 MOTOR의 특성 및 현장 조건에 따라 변경 가능함.

KOREA OCCUPATIONAL SAFETY & HEALTH AGENCY
192.168.11.76 / 2013-12-17 15:49:47

본 문서는 배포금지 문서입니다

LOAD LIMITER 권고 SETTING치

* POWER SOURCE : AC 3¢ 380V 60Hz

극동호이스트(주)

HOIST	MOTOR 용량	LOAD LIMITER 권고 SETTING치			LOAD CURRENT		C.T MODEL	연결단자 NO	C.T 용량	REMARK
		LOAD CURRENT	ADJ START TIME	SHOCK TIME	100%	110%				
C1 TON	2.4KW x 4P	110%	1 SEC	1 SEC	5.8 A	6.3 A	CT-2	K-K1, L-L1	5 V.A	
	0.4KW x 4P	110%	1 SEC	1 SEC	1.6 A	2.1 A	CT-1	K-K1, L-L1	5 V.A	
C2 TON	3.7KW x 4P	110%	1 SEC	1 SEC	9.3 A	11.3 A	CT-2	K-K1, L-L1	5 V.A	
	0.4KW x 4P	110%	1 SEC	1 SEC	1.6 A	2.1 A	CT-1	K-K1, L-L1	5 V.A	
C2.8 TON	5.0KW x 4P	110%	1 SEC	1 SEC	12.2 A	13.6 A	CT-2	K-K1, L-L1	5 V.A	
	1.5KW x 4P	110%	1 SEC	1 SEC	4.2 A	5.4 A	CT-1	K-K1, L-L1	5 V.A	
C3 TON	5.5KW x 4P	110%	1 SEC	1 SEC	12.2 A	13.6 A	CT-2	K-K1, L-L1	5 V.A	
	1.5KW x 4P	110%	1 SEC	1 SEC	4.2 A	5.4 A	CT-1	K-K1, L-L1	5 V.A	
C5 TON	5.5KW x 6P	110%	1 SEC	1 SEC	16.3 A	17.8 A	CT-2	K-K1, L-L1	5 V.A	
	1.0KW x 6P	110%	1 SEC	1 SEC	3.9 A	5.3 A	CT-1	K-K1, L-L1	5 V.A	
C7.5 TON	5.5KW x 6P	110%	1 SEC	1 SEC	16.3 A	17.8 A	CT-2	K-K1, L-L1	5 V.A	
	1.0KW x 6P	110%	1 SEC	1 SEC	3.9 A	5.3 A	CT-1	K-K1, L-L1	5 V.A	
C10 TON	9.0KW x 8P	110%	1 SEC	1 SEC	26.0 A	28.6 A	CT-2	K-K1, L-L1	5 V.A	
	1.1KW x 8P	110%	1 SEC	1 SEC	4.6 A	6.1 A	CT-2	K-K1, L-L1	5 V.A	

NOTE

1. 상기 TABLE의 수치는 권고 SETTING 수치이며 MOTOR의 특성 및 현장 조건에 따라 변경 가능함.

192.168.11.76 / 2013-12-17 15:49:47
KOREA OCCUPATIONAL SAFETY & HEALTH AGENCY
무단 배포 및 복제 금지

LOAD LIMITER 권고 SETTING치

* POWER SOURCE : AC 3Φ 440V 60Hz

극동호이스트(주)

HOIST	MOTOR 용량	LOAD LIMITER 권고 SETTING치			LOAD CURRENT		C.T MODEL	연결단자 NO	C.T 용량	REMARK
		LOAD CURRENT	ADJ START TIME	SHOCK TIME	100%	110%				
C1 TON	2.4KW x 4P	110%	1 SEC	1 SEC	5.0 A	7.3 A	CT-2	K-K1, L-L1	5 V.A	
	0.4KW x 4P	110%	1 SEC	1 SEC	1.4 A	1.8 A	CT-1	K-K1, L-L1	5 V.A	
C2 TON	3.7KW x 4P	110%	1 SEC	1 SEC	8.0 A	10.8 A	CT-2	K-K1, L-L1	5 V.A	
	0.4KW x 4P	110%	1 SEC	1 SEC	1.4 A	1.8 A	CT-1	K-K1, L-L1	5 V.A	
C2.8 TON	5.0KW x 4P	110%	1 SEC	1 SEC	10.5 A	13.7 A	CT-2	K-K1, L-L1	5 V.A	
	1.5KW x 4P	110%	1 SEC	1 SEC	3.7 A	4.3 A	CT-1	K-K1, L-L1	5 V.A	
C3 TON	5.5KW x 4P	110%	1 SEC	1 SEC	10.5 A	13.7 A	CT-2	K-K1, L-L1	5 V.A	
	1.5KW x 4P	110%	1 SEC	1 SEC	3.7 A	4.3 A	CT-1	K-K1, L-L1	5 V.A	
C5 TON	5.5KW x 6P	110%	1 SEC	1 SEC	14.1 A	18.5 A	CT-2	K-K1, L-L1	5 V.A	
	1.0KW x 6P	110%	1 SEC	1 SEC	3.3 A	4.7 A	CT-1	K-K1, L-L1	5 V.A	
C7.5 TON	5.5KW x 6P	110%	1 SEC	1 SEC	14.1 A	18.5 A	CT-2	K-K1, L-L1	5 V.A	
	1.0KW x 6P	110%	1 SEC	1 SEC	3.3 A	4.7 A	CT-1	K-K1, L-L1	5 V.A	
C10 TON	9.0KW x 8P	110%	1 SEC	1 SEC	22.5 A	24.8 A	CT-2	K-K1, L-L1	5 V.A	
	1.1KW x 8P	110%	1 SEC	1 SEC	4.0 A	5.4 A	CT-1	K-K1, L-L1	5 V.A	

NOTE

1. 상기 TABLE의 수치는 권고 SETTING 수치이며 MOTOR의 특성 및 현장 조건에 따라 변경 가능함.

무단배포금지
KOREA OCCUPATIONAL SAFETY & HEALTH AGENCY
192.168.11.76 / 2013-12-17 15:49:47

LOAD LIMITER 권고 SETTING치

* POWER SOURCE : AC 3¢ 460V 60Hz

극동호이스트(주)

HOIST	MOTOR 용량	LOAD LIMITER 권고 SETTING치			LOAD CURRENT		C.T MODEL	연결단자 NO	C.T 용량	REMARK
		LOAD CURRENT	ADJ START TIME	SHOCK TIME	100%	110%				
C1 TON	2.4KW x 4P	110%	1 SEC	1 SEC	4.8 A	5.2 A	CT-2	K-K1, L-L1	5 V.A	
	0.4KW x 4P	110%	1 SEC	1 SEC	1.3 A	1.5 A	CT-1	K-K1, L-L1	5 V.A	
C2 TON	3.7KW x 4P	110%	1 SEC	1 SEC	7.7 A	8.5 A	CT-2	K-K1, L-L1	5 V.A	
	0.4KW x 4P	110%	1 SEC	1 SEC	1.3 A	1.5 A	CT-1	K-K1, L-L1	5 V.A	
C2.8 TON	5.0KW x 4P	110%	1 SEC	1 SEC	10.0 A	11.5 A	CT-2	K-K1, L-L1	5 V.A	
	1.5KW x 4P	110%	1 SEC	1 SEC	3.5 A	4.3 A	CT-1	K-K1, L-L1	5 V.A	
C3 TON	5.5KW x 4P	110%	1 SEC	1 SEC	10.0 A	11.5 A	CT-2	K-K1, L-L1	5 V.A	
	1.5KW x 4P	110%	1 SEC	1 SEC	3.5 A	4.3 A	CT-1	K-K1, L-L1	5 V.A	
C5 TON	5.5KW x 6P	110%	1 SEC	1 SEC	13.5 A	14.7 A	CT-2	K-K1, L-L1	5 V.A	
	1.0KW x 6P	110%	1 SEC	1 SEC	3.2 A	3.6 A	CT-1	K-K1, L-L1	5 V.A	
C7.5 TON	5.5KW x 6P	110%	1 SEC	1 SEC	13.5 A	14.7 A	CT-2	K-K1, L-L1	5 V.A	
	1.0KW x 6P	110%	1 SEC	1 SEC	3.2 A	3.6 A	CT-1	K-K1, L-L1	5 V.A	
C10 TON	9.0KW x 8P	110%	1 SEC	1 SEC	21.5 A	23.7 A	CT-2	K-K1, L-L1	5 V.A	
	1.1KW x 8P	110%	1 SEC	1 SEC	4.0 A	5.4 A	CT-1	K-K1, L-L1	5 V.A	

NOTE

1. 상기 TABLE의 수치는 권고 SETTING 수치이며 MOTOR의 특성 및 현장 조건에 따라 변경 가능함.

불법복제 및 배포금지

KOREA OCCUPATIONAL SAFETY & HEALTH AGENCY
192.168.11.76 / 2013-12-17 15:49:47

LOAD LIMITER 권고 SETTING치

* POWER SOURCE : AC 3¢ 480V 60Hz

극동호이스트(주)

HOIST	MOTOR 용량	LOAD LIMITER 권고 SETTING치			LOAD CURRENT		C.T MODEL	연결단자 NO	C.T 용량	REMARK
		LOAD CURRENT	ADJ START TIME	SHOCK TIME	100%	110%				
C1 TON	2.4KW x 4P	110%	1 SEC	1 SEC	4.6 A	5.0 A	CT-2	K-K1, L-L1	5 V.A	
	0.4KW x 4P	110%	1 SEC	1 SEC	1.2 A	1.35 A	CT-1	K-K1, L-L1	5 V.A	
C2 TON	3.7KW x 4P	110%	1 SEC	1 SEC	7.3 A	8.2 A	CT-2	K-K1, L-L1	5 V.A	
	0.4KW x 4P	110%	1 SEC	1 SEC	1.2 A	1.35 A	CT-1	K-K1, L-L1	5 V.A	
C2.8 TON	5.0KW x 4P	110%	1 SEC	1 SEC	9.6 A	11.2 A	CT-2	K-K1, L-L1	5 V.A	
	1.5KW x 4P	110%	1 SEC	1 SEC	3.4 A	4.3 A	CT-1	K-K1, L-L1	5 V.A	
C3 TON	5.5KW x 4P	110%	1 SEC	1 SEC	9.6 A	11.2 A	CT-2	K-K1, L-L1	5 V.A	
	1.5KW x 4P	110%	1 SEC	1 SEC	3.4 A	4.3 A	CT-1	K-K1, L-L1	5 V.A	
C5 TON	5.5KW x 6P	110%	1 SEC	1 SEC	12.9 A	14.2 A	CT-2	K-K1, L-L1	5 V.A	
	1.0KW x 6P	110%	1 SEC	1 SEC	3.1 A	3.5 A	CT-1	K-K1, L-L1	5 V.A	
C7.5 TON	5.5KW x 6P	110%	1 SEC	1 SEC	12.9 A	14.2 A	CT-2	K-K1, L-L1	5 V.A	
	1.0KW x 6P	110%	1 SEC	1 SEC	3.1 A	3.5 A	CT-1	K-K1, L-L1	5 V.A	
C10 TON	9.0KW x 8P	110%	1 SEC	1 SEC	20.6 A	22.7 A	CT-2	K-K1, L-L1	5 V.A	
	1.1KW x 8P	110%	1 SEC	1 SEC	4.0 A	5.4 A	CT-1	K-K1, L-L1	5 V.A	

NOTE

1. 상기 TABLE의 수치는 권고 SETTING 수치이며 MOTOR의 특성 및 현장 조건에 따라 변경 가능함.

불법복제 및 배포금지

192.168.11.76 / 2013-12-17 15:49:47

E.O.C.R 권고 SETTING치

* POWER SOURCE : AC 3Φ 220V 60Hz

극동호이스트(주)

HOIST	MOTOR 용량	MOTOR 정격 전류	DRIVE TYPE	E.O.C.R TYPE	권고 SETTING 치			REMARK
					DELAY TIME	OPERATION TIME	CURRENT	
C1 TON	2.4KW x 4P	10.0 A	1 DRAVE	SS-30	3 SEC	1 SEC	10.0 A	
	0.4KW x 4P	2.7 A	1 DRAVE	SS-05	3 SEC	1 SEC	2.7 A	
C2 TON	3.7KW x 4P	16.0 A	1 DRAVE	SS-30	3 SEC	1 SEC	16.0 A	
	0.4KW x 4P	2.7 A	1 DRAVE	SS-05	3 SEC	1 SEC	2.7 A	
C2.8 TON	5.0KW x 4P	22.8 A	1 DRAVE	SS-30	3 SEC	1 SEC	22.8 A	
	1.5KW x 4P	7.3 A	1 DRAVE	SS-30	3 SEC	1 SEC	7.3 A	
C3 TON	5.5KW x 4P	22.8 A	1 DRAVE	SS-30	3 SEC	1 SEC	22.8 A	
	1.5KW x 4P	7.3 A	1 DRAVE	SS-30	3 SEC	1 SEC	7.3 A	
C5 TON	5.5KW x 6P	28.2 A	1 DRAVE	SS-30	3 SEC	1 SEC	28.2 A	
	1.0KW x 6P	6.7 A	1 DRAVE	SS-30	3 SEC	1 SEC	6.7 A	
C7.5 TON	5.5KW x 6P	28.2 A	1 DRAVE	SS-30	3 SEC	1 SEC	28.2 A	
	1.0KW x 6P	6.7 A	1 DRAVE	SS-30	3 SEC	1 SEC	6.7 A	
C10 TON	9.0KW x 8P	45.0 A	1 DRAVE	SS-60	3 SEC	1 SEC	45.0 A	
	1.1KW x 8P	8.0 A	1 DRAVE	SS-30	3 SEC	1 SEC	8.0 A	

NOTE

1. 상기 TABLE의 수치는 권고 SETTING 수치이며 MOTOR의 특성 및 현장 조건에 따라 변경 가능함.

불법복제 및 배포금지

192.168.11.76 / 2013-12-17 15:49:47

E.O.C.R 권고 SETTING치

* POWER SOURCE : AC 3¢ 380V 60Hz

극동호이스트(주)

HOIST	MOTOR 용량	1 정격 전류	DRIVE TYPE	E.O.C.R TYPE	권고 SETTING 치			REMARK
					DELAY TIME	OPERATION TIME	CURRENT	
C1 TON	2.4KW x 4P	5.8 A	1 DRAVE	SS-30	3 SEC	1 SEC	5.8 A	
	0.4KW x 4P	1.6 A	1 DRAVE	SS-05	3 SEC	1 SEC	1.6 A%	
C2 TON	3.7KW x 4P	9.3 A	1 DRAVE	SS-30	3 SEC	1 SEC	9.3 A	
	0.4KW x 4P	1.6 A	1 DRAVE	SS-05	3 SEC	1 SEC	1.6 A	
C2.8 TON	5.0KW x 4P	12.2 A	1 DRAVE	SS-30	3 SEC	1 SEC	12.2 A	
	1.5KW x 4P	4.2 A	1 DRAVE	SS-05	3 SEC	1 SEC	4.2 A	
C3 TON	5.5KW x 4P	12.2 A	1 DRAVE	SS-30	3 SEC	1 SEC	12.2 A	
	1.5KW x 4P	4.2 A	1 DRAVE	SS-05	3 SEC	1 SEC	4.2 A	
C5 TON	5.5KW x 6P	16.3 A	1 DRAVE	SS-30	3 SEC	1 SEC	16.3 A	
	1.0KW x 6P	3.9 A	1 DRAVE	SS-05	3 SEC	1 SEC	3.9 A	
C7.5 TON	5.5KW x 6P	16.3 A	1 DRAVE	SS-30	3 SEC	1 SEC	16.3 A	
	1.0KW x 6P	3.9 A	1 DRAVE	SS-05	3 SEC	1 SEC	3.9 A	
C10 TON	9.0KW x 8P	26.0 A	1 DRAVE	SS-30	3 SEC	1 SEC	26.0 A	
	1.1KW x 8P	4.6 A	1 DRAVE	SS-05	3 SEC	1 SEC	4.6 A	

NOTE

1. 상기 TABLE의 수치는 권고 SETTING 수치이며 MOTOR의 특성 및 현장 조건에 따라 변경 가능함.

불법복제 및 배포금지

192.168.11.76 / 2013-12-17 15:49:47

E.O.C.R 권고 SETTING치

* POWER SOURCE : AC 3Φ 440V 60Hz

극동호이스트(주)

HOIST	MOTOR 용량	MOTOR 정격 전류	DRIVE TYPE	E.O.C.R TYPE	권고 SETTING 치			REMARK
					DELAY TIME	OPERATION TIME	CURRENT	
C1 TON	2.4KW x 4P	5.0 A	1 DRAVE	SS-30	3 SEC	1 SEC	5.0 A	
	0.4KW x 4P	1.4 A	1 DRAVE	SS-05	3 SEC	1 SEC	1.4 A	
C2 TON	3.7KW x 4P	8.0 A	1 DRAVE	SS-30	3 SEC	1 SEC	8.0 A	
	0.4KW x 4P	1.4 A	1 DRAVE	SS-05	3 SEC	1 SEC	1.4 A	
C2.8 TON	5.0KW x 4P	10.5 A	1 DRAVE	SS-30	3 SEC	1 SEC	10.5 A	
	1.5KW x 4P	3.7 A	1 DRAVE	SS-05	3 SEC	1 SEC	3.7 A	
C3 TON	5.5KW x 4P	10.5 A	1 DRAVE	SS-30	3 SEC	1 SEC	10.5 A	
	1.5KW x 4P	3.7 A	1 DRAVE	SS-05	3 SEC	1 SEC	3.7 A	
C5 TON	5.5KW x 6P	14.1 A	1 DRAVE	SS-30	3 SEC	1 SEC	14.1 A	
	1.0KW x 6P	3.3 A	1 DRAVE	SS-05	3 SEC	1 SEC	3.3 A	
C7.5 TON	5.5KW x 6P	14.1 A	1 DRAVE	SS-30	3 SEC	1 SEC	14.1 A	
	1.0KW x 6P	3.3 A	1 DRAVE	SS-05	3 SEC	1 SEC	3.3 A	
C10 TON	9.0KW x 8P	22.5 A	1 DRAVE	SS-30	3 SEC	1 SEC	22.5 A	
	1.1KW x 8P	4.0 A	1 DRAVE	SS-05	3 SEC	1 SEC	4.0 A	

NOTE

1. 상기 TABLE의 수치는 권고 SETTING 수치이며 MOTOR의 특성 및 현장 조건에 따라 변경 가능함.

불법복제 및 배포금지

192.168.11.76 / 2013-12-17 15:49:47

KOREA OCCUPATIONAL SAFETY & HEALTH AGENCY

E.O.C.R 권고 SETTING치

* POWER SOURCE : AC 3¢ 460V 60Hz

극동호이스트(주)

HOIST	MOTOR 용량	MOTOR 정격 전류	DRIVE TYPE	E.O.C.R TYPE	권고 SETTING 치			REMARK
					DELAY TIME	OPERATION TIME	CURRENT	
C1 TON	2.4KW x 4P	4.8 A	1 DRAVE	SS-30	3 SEC	1 SEC	4.8 A	
	0.4KW x 4P	1.4 A	1 DRAVE	SS-05	3 SEC	1 SEC	1.4 A	
C2 TON	3.7KW x 4P	7.7 A	1 DRAVE	SS-30	3 SEC	1 SEC	7.7 A	
	0.4KW x 4P	1.4 A	1 DRAVE	SS-05	3 SEC	1 SEC	1.4 A	
C2.8 TON	5.0KW x 4P	10.0 A	1 DRAVE	SS-30	3 SEC	1 SEC	10.0 A	
	1.5KW x 4P	3.5 A	1 DRAVE	SS-05	3 SEC	1 SEC	3.5 A	
C3 TON	5.5KW x 4P	10.0 A	1 DRAVE	SS-30	3 SEC	1 SEC	10.0 A	
	1.5KW x 4P	3.5 A	1 DRAVE	SS-05	3 SEC	1 SEC	3.5 A	
C5 TON	5.5KW x 6P	13.5 A	1 DRAVE	SS-30	3 SEC	1 SEC	13.5 A	
	1.0KW x 6P	3.2 A	1 DRAVE	SS-05	3 SEC	1 SEC	3.2 A	
C7.5 TON	5.5KW x 6P	13.5 A	1 DRAVE	SS-30	3 SEC	1 SEC	13.5 A	
	1.0KW x 6P	3.2 A	1 DRAVE	SS-05	3 SEC	1 SEC	3.2 A	
C10 TON	9.0KW x 8P	21.5 A	1 DRAVE	SS-30	3 SEC	1 SEC	21.5 A	
	1.1KW x 8P	4.0 A	1 DRAVE	SS-05	3 SEC	1 SEC	4.0 A	

NOTE

1. 상기 TABLE의 수치는 권고 SETTING 수치이며 MOTOR의 특성 및 현장 조건에 따라 변경 가능함.

산업안전보건공단 KOREA OCCUPATIONAL SAFETY & HEALTH AGENCY
192.168.11.76 / 2013-12-17 15:49:47
불법문제 및 배포금지

E.O.C.R 권고 SETTING치

* POWER SOURCE : AC 3Φ 480V 60Hz

극동호이스트(주)

HOIST	MOTOR 용량	MOTOR 정격 전류	DRIVE TYPE	E.O.C.R TYPE	권고 SETTING 치			REMARK
					DELAY TIME	OPERATION TIME	CURRENT	
C1 TON	2.4KW x 4P	4.6 A	1 DRAVE	SS-30	3 SEC	1 SEC	4.6 A	
	0.4KW x 4P	1.4 A	1 DRAVE	SS-05	3 SEC	1 SEC	1.4 A	
C2 TON	3.7KW x 4P	7.3 A	1 DRAVE	SS-30	3 SEC	1 SEC	7.3 A	
	0.4KW x 4P	1.4 A	1 DRAVE	SS-05	3 SEC	1 SEC	1.4 A	
C2.8 TON	5.0KW x 4P	9.6 A	1 DRAVE	SS-30	3 SEC	1 SEC	9.6 A	
	1.5KW x 4P	3.4 A	1 DRAVE	SS-05	3 SEC	1 SEC	3.4 A	
C3 TON	5.5KW x 4P	9.6 A	1 DRAVE	SS-30	3 SEC	1 SEC	9.6 A	
	1.5KW x 4P	3.4 A	1 DRAVE	SS-05	3 SEC	1 SEC	3.4 A	
C5 TON	5.5KW x 6P	12.9 A	1 DRAVE	SS-30	3 SEC	1 SEC	12.9 A	
	1.0KW x 6P	3.1 A	1 DRAVE	SS-05	3 SEC	1 SEC	3.1 A	
C7.5 TON	5.5KW x 6P	12.9 A	1 DRAVE	SS-30	3 SEC	1 SEC	12.9 A	
	1.0KW x 6P	3.1 A	1 DRAVE	SS-05	3 SEC	1 SEC	3.1 A	
C10 TON	9.0KW x 8P	20.6 A	1 DRAVE	SS-30	3 SEC	1 SEC	20.6 A	
	1.1KW x 8P	4.0 A	1 DRAVE	SS-05	3 SEC	1 SEC	4.0 A	

NOTE

1. 상기 TABLE의 수치는 권고 SETTING 수치이며 MOTOR의 특성 및 현장 조건에 따라 변경 가능함.

무단배포 및 복제 금지

KOREA OCCUPATIONAL SAFETY & HEALTH AGENCY

192.168.11.76 / 2013-12-17 15:49:47

불법복제 및 배포금지

THREE PHASE INDUCTION MOTOR DATE SHEET

SCHEDULE OF TECHNICAL DATA

1. SERVICE	HOISTING
2. MANUFACTURE	극동호이스트 (주)
3. FRAME NUMBER	200 L
4. RATED POWER	17 KW x 8 P
5. RATED VOLTAGE AND FREQUENCY	220 V 60 Hz
6. MOTOR TYPE	SQUIRREL CAGE ROTOR TYPE
7. SERVICE FACTOR AND RATTING	1.0 , 30 MIN
8. LOCATION AND INSULATION CLASS	INDOOR, OUTDOOR, B CLASS
9. DESIGN TRMPERATURE RISE(BY RESISTANCE)	80 ℃
10. FULL LOAD SPEED	850 RPM
11. FULL LOAD CURRENT	76.6 A
12. STARTING CURRENT AT RATED VOLTAGE	455.8 A
13. MINIMUM STARTING VOLTAGE	200 V
14. EFFICIENCY AT 100% RATED LOAD	82 %
15. POWER FACTOR AT 100% RATED LOAD	71.5 %
16. STARTING TORQUE	39.72 KG.M
17. SITE ALTTITUDE(UNDER)	1000 M
18. ENCLOSURE & COOLING METHOD	T.E.F.C
19. TYPE OF BEARING	PL : 6312zz OPL : 6311zz
20. MOUNTING	HORIZONTAL
21. MAXIMUM AMBIENT TEMPURE	40 ℃
22. BEARING LUBRICATION	GREASE
23. STARTING METHOD	FULL VOLTAGE

심사
부산업안전보건공단
사업개시일부터
안전보건공단
KOREA OCCUPATIONAL SAFETY & HEALTH AGENCY
192.168.11.76 / 2013-12-17 15:49:47

불법복제 및 배포금지

THREE PHASE INDUCTION MOTOR DATE SHEET

SCHEDULE OF TECHNICAL DATA

1. SERVICE	HOISTING
2. MANUFACTURE	극동호이스트 (주)
3. FRAME NUMBER	200 L
4. RATED POWER	17 KW x 8 P
5. RATED VOLTAGE AND FREQUENCY	380 V 60 Hz
6. MOTOR TYPE	SQUIRREL CAGE ROTOR TYPE
7. SERVICE FACTOR AND RATTING	1.0 , 30 MIN
8. LOCATION AND INSULATION CLASS	INDOOR, OUTDOOR, B CLASS
9. DESIGN TRMPERATURE RISE(BY RESISTANCE)	80 ℃
10. FULL LOAD SPEED	850 RPM
11. FULL LOAD CURRENT	44.5 A
12. STARTING CURRENT AT RATED VOLTAGE	263.8 A
13. MINIMUM STARTING VOLTAGE	345 V
14. EFFICIENCY AT 100% RATED LOAD	82 %
15. POWER FACTOR AT 100% RATED LOAD	71.5 %
16. STARTING TORQUE	39.72 KG.M
17. SITE ALTTITUDE(UNDER)	1000 M
18. ENCLOSURE & COOLING METHOD	T E F C
19. TYPE OF BEARING	PL : 6312zz OPL : 6311zz
20. MOUNTING	H O R I Z O N T A L
21. MAXIMUM AMBIENT TEMPURE	40 ℃
22. BEARING LUBRICATION	G R E A S E
23. STARTING METHOD	F U L L V O L T A G E

검사 합격
한국산업안전보건공단
사업자등록번호
인천보건공단
KOREA OCCUPATIONAL SAFETY & HEALTH AGENCY
192.168.11.76 / 2013-12-17 15:49:47

불법복제 및 배포금지

THREE PHASE INDUCTION MOTOR DATE SHEET

SCHEDULE OF TECHNICAL DATA

1. SERVICE	HOISTING
2. MANUFACTURE	극동호이스트 (주)
3. FRAME NUMBER	200 L
4. RATED POWER	17 KW x 8 P
5. RATED VOLTAGE AND FREQUENCY	440 V 60 Hz
6. MOTOR TYPE	SQUIRREL CAGE ROTOR TYPE
7. SERVICE FACTOR AND RATTING	1.0 , 30 MIN
8. LOCATION AND INSULATION CLASS	INDOOR, OUTDOOR, B CLASS
9. DESIGN TRMPERATURE RISE(BY RESISTANCE)	80 ℃
10. FULL LOAD SPEED	850 RPM
11. FULL LOAD CURRENT	38.3 A
12. STARTING CURRENT AT RATED VOLTAGE	227.9 A
13. MINIMUM STARTING VOLTAGE	400 V
14. EFFICIENCY AT 100% RATED LOAD	82 %
15. POWER FACTOR AT 100% RATED LOAD	71.5 %
16. STARTING TORQUE	39.72 KG.M
17. SITE ALTTITUDE(UNDER)	1000 M
18. ENCLOSURE & COOLING METHOD	T E F C
19. TYPE OF BEARING	PL : 6312zz OPL : 6311zz
20. MOUNTING	H O R I Z O N T A L
21. MAXIMUM AMBIENT TEMPURE	40 ℃
22. BEARING LUBRICATION	G R E A S E
23. STARTING METHOD	F U L L V O L T A G E

검사
한국산업안전보건공단
사업개체에바
안전보건공단
KOREA OCCUPATIONAL SAFETY & HEALTH AGENCY
192.168.11.76 / 2013-12-17 15:49:47

불법복제 및 배포금지

THREE PHASE INDUCTION MOTOR DATE SHEET

SCHEDULE OF TECHNICAL DATA

1. SERVICE	HOISTING
2. MANUFACTURE	극동호이스트 (주)
3. FRAME NUMBER	200 L
4. RATED POWER	17 KW x 8 P
5. RATED VOLTAGE AND FREQUENCY	460 V 60 Hz
6. MOTOR TYPE	SQUIRREL CAGE ROTOR TYPE
7. SERVICE FACTOR AND RATTING	1.0 , 30 MIN
8. LOCATION AND INSULATION CLASS	INDOOR, OUTDOOR, B CLASS
9. DESIGN TRMPERATURE RISE(BY RESISTANCE)	80 ℃
10. FULL LOAD SPEED	850 RPM
11. FULL LOAD CURRENT	36.7 A
12. STARTING CURRENT AT RATED VOLTAGE	218.4 A
13. MINIMUM STARTING VOLTAGE	418 V
14. EFFICIENCY AT 100% RATED LOAD	82 %
15. POWER FACTOR AT 100% RATED LOAD	71.5 %
16. STARTING TORQUE	39.72 KG.M
17. SITE ALTTITUDE(UNDER)	1000 M
18. ENCLOSURE & COOLING METHOD	T E F C
19. TYPE OF BEARING	PL : 6312zz OPL : 6311zz
20. MOUNTING	H O R I Z O N T A L
21. MAXIMUM AMBIENT TEMPURE	40 ℃
22. BEARING LUBRICATION	G R E A S E
23. STARTING METHOD	F U L L V O L T A G E

사업장 대표
한국산업안전보건공단
사업장 대표이사
인천보건공단
KOREA OCCUPATIONAL SAFETY & HEALTH AGENCY
192.168.11.76 / 2013-12-17 15:49:47

불법복제 및 배포금지

THREE PHASE INDUCTION MOTOR DATE SHEET

SCHEDULE OF TECHNICAL DATA

1. SERVICE	HOISTING
2. MANUFACTURE	극동호이스트 (주)
3. FRAME NUMBER	200 L
4. RATED POWER	17 KW x 8 P
5. RATED VOLTAGE AND FREQUENCY	480 V 60 Hz
6. MOTOR TYPE	SQUIRREL CAGE ROTOR TYPE
7. SERVICE FACTOR AND RATTING	1.0 , 30 MIN
8. LOCATION AND INSULATION CLASS	INDOOR, OUTDOOR, B CLASS
9. DESIGN TRMPERATURE RISE(BY RESISTANCE)	80 ℃
10. FULL LOAD SPEED	850 RPM
11. FULL LOAD CURRENT	35.2 A
12. STARTING CURRENT AT RATED VOLTAGE	209.3 A
13. MINIMUM STARTING VOLTAGE	436 V
14. EFFICIENCY AT 100% RATED LOAD	82 %
15. POWER FACTOR AT 100% RATED LOAD	71.5 %
16. STARTING TORQUE	39.72 KG.M
17. SITE ALTTITUDE(UNDER)	1000 M
18. ENCLOSURE & COOLING METHOD	TEFC
19. TYPE OF BEARING	PL : 6312zz OPL : 6311zz
20. MOUNTING	HORIZONTAL
21. MAXIMUM AMBIENT TEMPURE	40 ℃
22. BEARING LUBRICATION	GREASE
23. STARTING METHOD	FULL VOLTAGE

검사
한국산업안전보건공단
사이버재해예방
안전보건공단
KOREA OCCUPATIONAL SAFETY & HEALTH AGENCY
192.168.11.76 / 2013-12-17 15:49:47

불법복제 및 배포금지

THREE PHASE INDUCTION MOTOR DATE SHEET

SCHEDULE OF TECHNICAL DATA

1. SERVICE	CREEP HOIST
2. MANUFACTURE	극동호이스트 (주)
3. FRAME NUMBER	112 M
4. RATED POWER	1.8 KW x 8 P
5. RATED VOLTAGE AND FREQUENCY	220 V 60 Hz
6. MOTOR TYPE	SQUIRREL CAGE ROTOR TYPE
7. SERVICE FACTOR AND RATTING	1 . 0 , 30 MIN
8. LOCATION AND INSULATION CLASS	INDOOR, OUTDOOR, B CLASS
9. DESIGN TRMPERATURE RISE(BY RESISTANCE)	80 ℃
10. FULL LOAD SPEED	850 RPM
11. FULL LOAD CURRENT	11 A
12. STARTING CURRENT AT RATED VOLTAGE	55 A
13. MINIMUM STARTING VOLTAGE	200 V
14. EFFICIENCY AT 100% RATED LOAD	71.5 %
15. POWER FACTOR AT 100% RATED LOAD	60 %
16. STARTING TORQUE	6.93 KG.M
17. SITE ALTTITUDE(UNDER)	1000 M
18. ENCLOSURE & COOLING METHOD	T E N V
19. TYPE OF BEARING	PL : 6209zz OPL : 6206zz
20. MOUNTING	H O R I Z O N T A L
21. MAXIMUM AMBIENT TEMPURE	40 ℃
22. BEARING LUBRICATION	G R E A S E
23. STARTING METHOD	F U L L V O L T A G E

산업재해예방 안전보건공단
KOREA OCCUPATIONAL SAFETY & HEALTH AGENCY

192.168.11.76 / 2013-12-17 15:49:47

불법복제 및 배포금지

THREE PHASE INDUCTION MOTOR DATE SHEET

SCHEDULE OF TECHNICAL DATA

1. SERVICE	CREEP HOIST
2. MANUFACTURE	극동호이스트 (주)
3. FRAME NUMBER	112 M
4. RATED POWER	1.8 KW x 8 P
5. RATED VOLTAGE AND FREQUENCY	380 V 60 Hz
6. MOTOR TYPE	SQUIRREL CAGE ROTOR TYPE
7. SERVICE FACTOR AND RATTING	1 . 0 , 30 MIN
8. LOCATION AND INSULATION CLASS	INDOOR, OUTDOOR, B CLASS
9. DESIGN TRMPERATURE RISE(BY RESISTANCE)	80 ℃
10. FULL LOAD SPEED	850 RPM
11. FULL LOAD CURRENT	6.4 A
12. STARTING CURRENT AT RATED VOLTAGE	31.9 A
13. MINIMUM STARTING VOLTAGE	345 V
14. EFFICIENCY AT 100% RATED LOAD	71.5 %
15. POWER FACTOR AT 100% RATED LOAD	60 %
16. STARTING TORQUE	6.93 KG.M
17. SITE ALTTITUDE(UNDER)	1000 M
18. ENCLOSURE & COOLING METHOD	T E N V
19. TYPE OF BEARING	PL : 6209zz OPL : 6206zz
20. MOUNTING	H O R I Z O N T A L
21. MAXIMUM AMBIENT TEMPURE	40 ℃
22. BEARING LUBRICATION	G R E A S E
23. STARTING METHOD	F U L L V O L T A G E

산업재해예방
안전보건공단
KOREA OCCUPATIONAL SAFETY & HEALTH AGENCY

192.168.11.76 / 2013-12-17 15:49:47

불법복제 및 배포금지

THREE PHASE INDUCTION MOTOR DATE SHEET

SCHEDULE OF TECHNICAL DATA

1. SERVICE	CREEP HOIST
2. MANUFACTURE	극동호이스트 (주)
3. FRAME NUMBER	112 M
4. RATED POWER	1.8 KW x 8 P
5. RATED VOLTAGE AND FREQUENCY	440 V 60 Hz
6. MOTOR TYPE	SQUIRREL CAGE ROTOR TYPE
7. SERVICE FACTOR AND RATTING	1 . 0 , 30 MIN
8. LOCATION AND INSULATION CLASS	INDOOR, OUTDOOR, B CLASS
9. DESIGN TRMPERATURE RISE(BY RESISTANCE)	80 ℃
10. FULL LOAD SPEED	850 RPM
11. FULL LOAD CURRENT	5.5 A
12. STARTING CURRENT AT RATED VOLTAGE	27.5 A
13. MINIMUM STARTING VOLTAGE	400 V
14. EFFICIENCY AT 100% RATED LOAD	71.5 %
15. POWER FACTOR AT 100% RATED LOAD	60 %
16. STARTING TORQUE	6.93 KG.M
17. SITE ALTTITUDE(UNDER)	1000 M
18. ENCLOSURE & COOLING METHOD	T E N V
19. TYPE OF BEARING	PL : 6209zz OPL : 6206zz
20. MOUNTING	H O R I Z O N T A L
21. MAXIMUM AMBIENT TEMPURE	40 ℃
22. BEARING LUBRICATION	G R E A S E
23. STARTING METHOD	F U L L V O L T A G E

검 사 필
한국산업안전보건공단
산업재해예방
안전보건공단
KOREA OCCUPATIONAL SAFETY & HEALTH AGENCY
192.168.11.76 / 2013-12-17 15:49:47

불법복제 및 배포금지

THREE PHASE INDUCTION MOTOR DATE SHEET

SCHEDULE OF TECHNICAL DATA

1. SERVICE	CREEP HOIST
2. MANUFACTURE	극동호이스트 (주)
3. FRAME NUMBER	112 M
4. RATED POWER	1.8 KW x 8 P
5. RATED VOLTAGE AND FREQUENCY	460 V 60 Hz
6. MOTOR TYPE	SQUIRREL CAGE ROTOR TYPE
7. SERVICE FACTOR AND RATTING	1 . 0 , 30 MIN
8. LOCATION AND INSULATION CLASS	INDOOR, OUTDOOR, B CLASS
9. DESIGN TRMPERATURE RISE(BY RESISTANCE)	80 ℃
10. FULL LOAD SPEED	850 RPM
11. FULL LOAD CURRENT	5.3 A
12. STARTING CURRENT AT RATED VOLTAGE	26.4 A
13. MINIMUM STARTING VOLTAGE	418 V
14. EFFICIENCY AT 100% RATED LOAD	71.5 %
15. POWER FACTOR AT 100% RATED LOAD	60 %
16. STARTING TORQUE	6.93 KG.M
17. SITE ALTTITUDE(UNDER)	1000 M
18. ENCLOSURE & COOLING METHOD	T E N V
19. TYPE OF BEARING	PL : 6209zz OPL : 6206zz
20. MOUNTING	H O R I Z O N T A L
21. MAXIMUM AMBIENT TEMPURE	40 ℃
22. BEARING LUBRICATION	G R E A S E
23. STARTING METHOD	F U L L V O L T A G E

산업재해예방
안전보건공단
KOREA OCCUPATIONAL SAFETY & HEALTH AGENCY

192.168.11.76 / 2013-12-17 15:49:47

불법복제 및 배포금지

THREE PHASE INDUCTION MOTOR DATE SHEET

SCHEDULE OF TECHNICAL DATA

1. SERVICE	CREEP HOIST
2. MANUFACTURE	극동호이스트 (주)
3. FRAME NUMBER	112 M
4. RATED POWER	1.8 KW x 8 P
5. RATED VOLTAGE AND FREQUENCY	480 V 60 Hz
6. MOTOR TYPE	SQUIRREL CAGE ROTOR TYPE
7. SERVICE FACTOR AND RATTING	1 . 0 , 30 MIN
8. LOCATION AND INSULATION CLASS	INDOOR, OUTDOOR, B CLASS
9. DESIGN TRMPERATURE RISE(BY RESISTANCE)	80 ℃
10. FULL LOAD SPEED	850 RPM
11. FULL LOAD CURRENT	5.1 A
12. STARTING CURRENT AT RATED VOLTAGE	25.3 A
13. MINIMUM STARTING VOLTAGE	436 V
14. EFFICIENCY AT 100% RATED LOAD	71.5 %
15. POWER FACTOR AT 100% RATED LOAD	60 %
16. STARTING TORQUE	6.93 KG.M
17. SITE ALTTITUDE(UNDER)	1000 M
18. ENCLOSURE & COOLING METHOD	T E N V
19. TYPE OF BEARING	PL : 6209zz OPL : 6206zz
20. MOUNTING	H O R I Z O N T A L
21. MAXIMUM AMBIENT TEMPURE	40 ℃
22. BEARING LUBRICATION	G R E A S E
23. STARTING METHOD	F U L L V O L T A G E

검사 대상
KCS
안전보건공단
산업재해예방
안전보건공단
KOREA OCCUPATIONAL SAFETY & HEALTH AGENCY
192.168.11.76 / 2013-12-17 15:49:47

불법복제 및 배포금지

THREE PHASE INDUCTION MOTOR DATE SHEET

SCHEDULE OF TECHNICAL DATA

1. SERVICE	TRAVERSING
2. MANUFACTURE	극동호이스트 (주)
3. FRAME NUMBER	90 L
4. RATED POWER	1.5 KW x 4 P
5. RATED VOLTAGE AND FREQUENCY	220 V 60 Hz
6. MOTOR TYPE	SQUIRREL CAGE ROTOR TYPE
7. SERVICE FACTOR AND RATTING	1 . 0 , 30 MIN
8. LOCATION AND INSULATION CLASS	INDOOR, OUTDOOR, B CLASS
9. DESIGN TRMPERATURE RISE(BY RESISTANCE)	80 ℃
10. FULL LOAD SPEED	1760 RPM
11. FULL LOAD CURRENT	7.3 A
12. STARTING CURRENT AT RATED VOLTAGE	41.8 A
13. MINIMUM STARTING VOLTAGE	200 V
14. EFFICIENCY AT 100% RATED LOAD	73 %
15. POWER FACTOR AT 100% RATED LOAD	75 %
16. STARTING TORQUE	1.95 KG.M
17. SITE ALTTITUDE(UNDER)	1000 M
18. ENCLOSURE & COOLING METHOD	T E N V
19. TYPE OF BEARING	PL : 6206zz OPL : 6204zz
20. MOUNTING	H O R I Z O N T A L
21. MAXIMUM AMBIENT TEMPURE	40 ℃
22. BEARING LUBRICATION	G R E A S E
23. STARTING METHOD	F U L L V O L T A G E

산업재해예방 안전보건공단
KOREA OCCUPATIONAL SAFETY & HEALTH AGENCY
192.168.11.76 / 2013-12-17 15:49:47

불법복제 및 배포금지

THREE PHASE INDUCTION MOTOR DATE SHEET

SCHEDULE OF TECHNICAL DATA

1. SERVICE	TRAVERSING
2. MANUFACTURE	극동호이스트 (주)
3. FRAME NUMBER	90 L
4. RATED POWER	1.5 KW x 4 P
5. RATED VOLTAGE AND FREQUENCY	380 V 60 Hz
6. MOTOR TYPE	SQUIRREL CAGE ROTOR TYPE
7. SERVICE FACTOR AND RATTING	1 . 0 , 30 MIN
8. LOCATION AND INSULATION CLASS	INDOOR, OUTDOOR, B CLASS
9. DESIGN TRMPERATURE RISE(BY RESISTANCE)	80 ℃
10. FULL LOAD SPEED	1760 RPM
11. FULL LOAD CURRENT	4.2 A
12. STARTING CURRENT AT RATED VOLTAGE	24.2 A
13. MINIMUM STARTING VOLTAGE	345 V
14. EFFICIENCY AT 100% RATED LOAD	73 %
15. POWER FACTOR AT 100% RATED LOAD	75 %
16. STARTING TORQUE	1.95 KG.M
17. SITE ALTTITUDE(UNDER)	1000 M
18. ENCLOSURE & COOLING METHOD	T E N V
19. TYPE OF BEARING	PL : 6206zz OPL : 6204zz
20. MOUNTING	H O R I Z O N T A L
21. MAXIMUM AMBIENT TEMPURE	40 ℃
22. BEARING LUBRICATION	G R E A S E
23. STARTING METHOD	F U L L V O L T A G E

검사대상
한국산업안전보건공단
산업재해예방
안전보건공단
KOREA OCCUPATIONAL SAFETY & HEALTH AGENCY
192.168.11.76 / 2013-12-17 15:49:47

불법복제 및 배포금지

THREE PHASE INDUCTION MOTOR DATE SHEET

SCHEDULE OF TECHNICAL DATA

1. SERVICE	TRAVERSING
2. MANUFACTURE	극동호이스트 (주)
3. FRAME NUMBER	90 L
4. RATED POWER	1.5 KW x 4 P
5. RATED VOLTAGE AND FREQUENCY	440 V 60 Hz
6. MOTOR TYPE	SQUIRREL CAGE ROTOR TYPE
7. SERVICE FACTOR AND RATTING	1 . 0 , 30 MIN
8. LOCATION AND INSULATION CLASS	INDOOR, OUTDOOR, B CLASS
9. DESIGN TRMPERATURE RISE(BY RESISTANCE)	80 ℃
10. FULL LOAD SPEED	1760 RPM
11. FULL LOAD CURRENT	3.7 A
12. STARTING CURRENT AT RATED VOLTAGE	20.9 A
13. MINIMUM STARTING VOLTAGE	400 V
14. EFFICIENCY AT 100% RATED LOAD	73 %
15. POWER FACTOR AT 100% RATED LOAD	75 %
16. STARTING TORQUE	1.95 KG.M
17. SITE ALTTITUDE(UNDER)	1000 M
18. ENCLOSURE & COOLING METHOD	T E N V
19. TYPE OF BEARING	PL : 6206zz OPL : 6204zz
20. MOUNTING	H O R I Z O N T A L
21. MAXIMUM AMBIENT TEMPURE	40 ℃
22. BEARING LUBRICATION	G R E A S E
23. STARTING METHOD	F U L L V O L T A G E

산업재해예방 안전보건공단
KOREA OCCUPATIONAL SAFETY & HEALTH AGENCY

192.168.11.76 / 2013-12-17 15:49:47

불법복제 및 배포금지

THREE PHASE INDUCTION MOTOR DATE SHEET

SCHEDULE OF TECHNICAL DATA

1. SERVICE	TRAVERSING
2. MANUFACTURE	극동호이스트 (주)
3. FRAME NUMBER	90 L
4. RATED POWER	1.5 KW x 4 P
5. RATED VOLTAGE AND FREQUENCY	460 V 60 Hz
6. MOTOR TYPE	SQUIRREL CAGE ROTOR TYPE
7. SERVICE FACTOR AND RATTING	1.0 , 30 MIN
8. LOCATION AND INSULATION CLASS	INDOOR, OUTDOOR, B CLASS
9. DESIGN TRMPERATURE RISE(BY RESISTANCE)	80 ℃
10. FULL LOAD SPEED	1760 RPM
11. FULL LOAD CURRENT	3.5 A
12. STARTING CURRENT AT RATED VOLTAGE	20 A
13. MINIMUM STARTING VOLTAGE	418 V
14. EFFICIENCY AT 100% RATED LOAD	73 %
15. POWER FACTOR AT 100% RATED LOAD	75 %
16. STARTING TORQUE	1.95 KG.M
17. SITE ALTTITUDE(UNDER)	1000 M
18. ENCLOSURE & COOLING METHOD	T E N V
19. TYPE OF BEARING	PL : 6206zz OPL : 6204zz
20. MOUNTING	H O R I Z O N T A L
21. MAXIMUM AMBIENT TEMPURE	40 ℃
22. BEARING LUBRICATION	G R E A S E
23. STARTING METHOD	F U L L V O L T A G E

산업재해예방
안전보건공단
KOREA OCCUPATIONAL SAFETY & HEALTH AGENCY

192.168.11.76 / 2013-12-17 15:49:47

불법복제 및 배포금지

THREE PHASE INDUCTION MOTOR DATE SHEET

SCHEDULE OF TECHNICAL DATA

1. SERVICE	TRAVERSING
2. MANUFACTURE	극동호이스트 (주)
3. FRAME NUMBER	90 L
4. RATED POWER	1.5 KW x 4 P
5. RATED VOLTAGE AND FREQUENCY	480 V 60 Hz
6. MOTOR TYPE	SQUIRREL CAGE ROTOR TYPE
7. SERVICE FACTOR AND RATTING	1 . 0 , 30 MIN
8. LOCATION AND INSULATION CLASS	INDOOR, OUTDOOR, B CLASS
9. DESIGN TRMPERATURE RISE(BY RESISTANCE)	80 ℃
10. FULL LOAD SPEED	1760 RPM
11. FULL LOAD CURRENT	3.4 A
12. STARTING CURRENT AT RATED VOLTAGE	19.2 A
13. MINIMUM STARTING VOLTAGE	436 V
14. EFFICIENCY AT 100% RATED LOAD	73 %
15. POWER FACTOR AT 100% RATED LOAD	75 %
16. STARTING TORQUE	1.95 KG.M
17. SITE ALTTITUDE(UNDER)	1000 M
18. ENCLOSURE & COOLING METHOD	T E N V
19. TYPE OF BEARING	PL : 6206zz OPL : 6204zz
20. MOUNTING	H O R I Z O N T A L
21. MAXIMUM AMBIENT TEMPURE	40 ℃
22. BEARING LUBRICATION	G R E A S E
23. STARTING METHOD	F U L L V O L T A G E

산업재해예방 안전보건공단
KOREA OCCUPATIONAL SAFETY & HEALTH AGENCY

192.168.11.76 / 2013-12-17 15:49:47

불법복제 및 배포금지

THREE PHASE INDUCTION MOTOR DATE SHEET

SCHEDULE OF TECHNICAL DATA

1. SERVICE	TRAVERSING
2. MANUFACTURE	극동호이스트 (주)
3. FRAME NUMBER	90 L
4. RATED POWER	1.0 KW x 6 P
5. RATED VOLTAGE AND FREQUENCY	220 V 60 Hz
6. MOTOR TYPE	SQUIRREL CAGE ROTOR TYPE
7. SERVICE FACTOR AND RATTING	1 . 0 , 30 MIN
8. LOCATION AND INSULATION CLASS	INDOOR, OUTDOOR, B CLASS
9. DESIGN TRMPERATURE RISE(BY RESISTANCE)	80 ℃
10. FULL LOAD SPEED	1160 RPM
11. FULL LOAD CURRENT	6.7 A
12. STARTING CURRENT AT RATED VOLTAGE	23.8 A
13. MINIMUM STARTING VOLTAGE	200 V
14. EFFICIENCY AT 100% RATED LOAD	63.5 %
15. POWER FACTOR AT 100% RATED LOAD	62 %
16. STARTING TORQUE	1.6 KG.M
17. SITE ALTTITUDE(UNDER)	1000 M
18. ENCLOSURE & COOLING METHOD	T E N V
19. TYPE OF BEARING	PL : 6206zz OPL : 6204zz
20. MOUNTING	H O R I Z O N T A L
21. MAXIMUM AMBIENT TEMPURE	40 ℃
22. BEARING LUBRICATION	G R E A S E
23. STARTING METHOD	F U L L V O L T A G E

검 사 원
한국산업안전보건공단
산업재해예방
안전보건공단
KOREA OCCUPATIONAL SAFETY & HEALTH AGENCY
192.168.11.76 / 2013-12-17 15:49:47

불법복제 및 배포금지

THREE PHASE INDUCTION MOTOR DATE SHEET

SCHEDULE OF TECHNICAL DATA

1. SERVICE	TRAVERSING
2. MANUFACTURE	극동호이스트 (주)
3. FRAME NUMBER	90 L
4. RATED POWER	1.0 KW x 6 P
5. RATED VOLTAGE AND FREQUENCY	380 V 60 Hz
6. MOTOR TYPE	SQUIRREL CAGE ROTOR TYPE
7. SERVICE FACTOR AND RATTING	1 . 0 , 30 MIN
8. LOCATION AND INSULATION CLASS	INDOOR, OUTDOOR, B CLASS
9. DESIGN TRMPERATURE RISE(BY RESISTANCE)	80 ℃
10. FULL LOAD SPEED	1160 RPM
11. FULL LOAD CURRENT	3.9 A
12. STARTING CURRENT AT RATED VOLTAGE	13.8 A
13. MINIMUM STARTING VOLTAGE	345 V
14. EFFICIENCY AT 100% RATED LOAD	63.5 %
15. POWER FACTOR AT 100% RATED LOAD	62 %
16. STARTING TORQUE	1.6 KG.M
17. SITE ALTTITUDE(UNDER)	1000 M
18. ENCLOSURE & COOLING METHOD	T F N V
19. TYPE OF BEARING	PL : 6206zz OPL : 6204zz
20. MOUNTING	H O R I Z O N T A L
21. MAXIMUM AMBIENT TEMPURE	40 ℃
22. BEARING LUBRICATION	G R E A S E
23. STARTING METHOD	F U L L V O L T A G E

산업재해예방
안전보건공단
KOREA OCCUPATIONAL SAFETY & HEALTH AGENCY

192.168.11.76 / 2013-12-17 15:49:47

불법복제 및 배포금지

THREE PHASE INDUCTION MOTOR DATE SHEET

SCHEDULE OF TECHNICAL DATA

1. SERVICE	TRAVERSING
2. MANUFACTURE	극동호이스트 (주)
3. FRAME NUMBER	90 L
4. RATED POWER	1.0 KW x 6 P
5. RATED VOLTAGE AND FREQUENCY	440 V 60 Hz
6. MOTOR TYPE	SQUIRREL CAGE ROTOR TYPE
7. SERVICE FACTOR AND RATTING	1 . 0 , 30 MIN
8. LOCATION AND INSULATION CLASS	INDOOR, OUTDOOR, B CLASS
9. DESIGN TRMPERATURE RISE(BY RESISTANCE)	80 ℃
10. FULL LOAD SPEED	1160 RPM
11. FULL LOAD CURRENT	3.3 A
12. STARTING CURRENT AT RATED VOLTAGE	11.9 A
13. MINIMUM STARTING VOLTAGE	400 V
14. EFFICIENCY AT 100% RATED LOAD	63.5 %
15. POWER FACTOR AT 100% RATED LOAD	62 %
16. STARTING TORQUE	1.6 KG.M
17. SITE ALTTITUDE(UNDER)	1000 M
18. ENCLOSURE & COOLING METHOD	T E N V
19. TYPE OF BEARING	PL : 6206zz OPL : 6204zz
20. MOUNTING	H O R I Z O N T A L
21. MAXIMUM AMBIENT TEMPURE	40 ℃
22. BEARING LUBRICATION	G R E A S E
23. STARTING METHOD	F U L L V O L T A G E

산업재해예방
안전보건공단
KOREA OCCUPATIONAL SAFETY & HEALTH AGENCY

192.168.11.76 / 2013-12-17 15:49:47

불법복제 및 배포금지

THREE PHASE INDUCTION MOTOR DATE SHEET

SCHEDULE OF TECHNICAL DATA

1. SERVICE	TRAVERSING
2. MANUFACTURE	극동호이스트 (주)
3. FRAME NUMBER	90 L
4. RATED POWER	1.0 KW x 6 P
5. RATED VOLTAGE AND FREQUENCY	460 V 60 Hz
6. MOTOR TYPE	SQUIRREL CAGE ROTOR TYPE
7. SERVICE FACTOR AND RATTING	1 . 0 , 30 MIN
8. LOCATION AND INSULATION CLASS	INDOOR, OUTDOOR, B CLASS
9. DESIGN TRMPERATURE RISE(BY RESISTANCE)	80 ℃
10. FULL LOAD SPEED	1160 RPM
11. FULL LOAD CURRENT	3.2 A
12. STARTING CURRENT AT RATED VOLTAGE	11.9 A
13. MINIMUM STARTING VOLTAGE	418 V
14. EFFICIENCY AT 100% RATED LOAD	63.5 %
15. POWER FACTOR AT 100% RATED LOAD	62 %
16. STARTING TORQUE	1.6 KG.M
17. SITE ALTTITUDE(UNDER)	1000 M
18. ENCLOSURE & COOLING METHOD	T E N V
19. TYPE OF BEARING	PL : 6206zz OPL : 6204zz
20. MOUNTING	H O R I Z O N T A L
21. MAXIMUM AMBIENT TEMPURE	40 ℃
22. BEARING LUBRICATION	G R E A S E
23. STARTING METHOD	F U L L V O L T A G E

산업재해예방 안전보건공단
KOREA OCCUPATIONAL SAFETY & HEALTH AGENCY

192.168.11.76 / 2013-12-17 15:49:47

불법복제 및 배포금지

THREE PHASE INDUCTION MOTOR DATE SHEET

SCHEDULE OF TECHNICAL DATA

1. SERVICE	TRAVERSING
2. MANUFACTURE	극동호이스트 (주)
3. FRAME NUMBER	90 L
4. RATED POWER	1.0 KW x 6 P
5. RATED VOLTAGE AND FREQUENCY	480 V 60 Hz
6. MOTOR TYPE	SQUIRREL CAGE ROTOR TYPE
7. SERVICE FACTOR AND RATTING	1 . 0 , 30 MIN
8. LOCATION AND INSULATION CLASS	INDOOR, OUTDOOR, B CLASS
9. DESIGN TRMPERATURE RISE(BY RESISTANCE)	80 ℃
10. FULL LOAD SPEED	1160 RPM
11. FULL LOAD CURRENT	3.1 A
12. STARTING CURRENT AT RATED VOLTAGE	10.9 A
13. MINIMUM STARTING VOLTAGE	436 V
14. EFFICIENCY AT 100% RATED LOAD	63.5 %
15. POWER FACTOR AT 100% RATED LOAD	62 %
16. STARTING TORQUE	1.6 KG.M
17. SITE ALTTITUDE(UNDER)	1000 M
18. ENCLOSURE & COOLING METHOD	T E N V
19. TYPE OF BEARING	PL : 6206zz OPL : 6204zz
20. MOUNTING	H O R I Z O N T A L
21. MAXIMUM AMBIENT TEMPURE	40 ℃
22. BEARING LUBRICATION	G R E A S E
23. STARTING METHOD	F U L L V O L T A G E

산업재해예방
안전보건공단
KOREA OCCUPATIONAL SAFETY & HEALTH AGENCY

192.168.11.76 / 2013-12-17 15:49:47

불법복제 및 배포금지

THREE PHASE INDUCTION MOTOR DATE SHEET

SCHEDULE OF TECHNICAL DATA

1. SERVICE	TRAVERSING
2. MANUFACTURE	극동호이스트(주)
3. FRAME NUMBER	90 L
4. RATED POWER	1.5/0.75 KW x 4/8 P
5. RATED VOLTAGE AND FREQUENCY	220 V 60 Hz
6. MOTOR TYPE	SQUIRREL CAGE ROTOR TYPE
7. SERVICE FACTOR AND RATTING	1 . 0 , 30 MIN
8. LOCATION AND INSULATION CLASS	INDOOR, OUTDOOR, B CLASS
9. DESIGN TRMPERATURE RISE(BY RESISTANCE)	80 ℃
10. FULL LOAD SPEED	1700/815 RPM
11. FULL LOAD CURRENT	7.2/6.2 A
12. STARTING CURRENT AT RATED VOLTAGE	35.6/21.7 A
13. MINIMUM STARTING VOLTAGE	200 V
14. EFFICIENCY AT 100% RATED LOAD	69.5/63 %
15. POWER FACTOR AT 100% RATED LOAD	74/50 %
16. STARTING TORQUE	1.48/1.22 KG.M
17. SITE ALTTITUDE(UNDER)	1000 M
18. ENCLOSURE & COOLING METHOD	T E N V
19. TYPE OF BEARING	PL : 6206zz OPL : 6206zz
20. MOUNTING	H O R I Z O N T A L
21. MAXIMUM AMBIENT TEMPURE	40 ℃
22. BEARING LUBRICATION	G R E A S E
23. STARTING METHOD	F U L L V O L T A G E

한국산업안전보건공단
산업재해예방
안전보건공단
KOREA OCCUPATIONAL SAFETY & HEALTH AGENCY
192.168.11.76 / 2013-12-17 15:49:47

불법복제 및 배포금지

THREE PHASE INDUCTION MOTOR DATE SHEET

SCHEDULE OF TECHNICAL DATA

1. SERVICE	TRAVERSING
2. MANUFACTURE	극동호이스트(주)
3. FRAME NUMBER	90 L
4. RATED POWER	1.5/0.75 KW x 4/8 P
5. RATED VOLTAGE AND FREQUENCY	380 V 60 Hz
6. MOTOR TYPE	SQUIRREL CAGE ROTOR TYPE
7. SERVICE FACTOR AND RATTING	1 . 0 , 30 MIN
8. LOCATION AND INSULATION CLASS	INDOOR, OUTDOOR, B CLASS
9. DESIGN TRMPERATURE RISE(BY RESISTANCE)	80 ℃
10. FULL LOAD SPEED	1700/815 RPM
11. FULL LOAD CURRENT	4.17/3.59 A
12. STARTING CURRENT AT RATED VOLTAGE	20.6/12.56 A
13. MINIMUM STARTING VOLTAGE	345 V
14. EFFICIENCY AT 100% RATED LOAD	69.5/63 %
15. POWER FACTOR AT 100% RATED LOAD	74/50 %
16. STARTING TORQUE	1.48/1.22 KG.M
17. SITE ALTTITUDE(UNDER)	1000 M
18. ENCLOSURE & COOLING METHOD	T E N V
19. TYPE OF BEARING	PL : 6206zz OPL : 6206zz
20. MOUNTING	H O R I Z O N T A L
21. MAXIMUM AMBIENT TEMPURE	40 ℃
22. BEARING LUBRICATION	G R E A S E
23. STARTING METHOD	F U L L V O L T A G E

산업재해예방
안전보건공단
KOREA OCCUPATIONAL SAFETY & HEALTH AGENCY

192.168.11.76 / 2013-12-17 15:49:47

불법복제 및 배포금지

THREE PHASE INDUCTION MOTOR DATE SHEET

SCHEDULE OF TECHNICAL DATA

1. SERVICE	TRAVERSING
2. MANUFACTURE	극동호이스트(주)
3. FRAME NUMBER	90 L
4. RATED POWER	1.5/0.75 KW x 4/8 P
5. RATED VOLTAGE AND FREQUENCY	440 V 60 Hz
6. MOTOR TYPE	SQUIRREL CAGE ROTOR TYPE
7. SERVICE FACTOR AND RATTING	1 . 0 , 30 MIN
8. LOCATION AND INSULATION CLASS	INDOOR, OUTDOOR, B CLASS
9. DESIGN TRMPERATURE RISE(BY RESISTANCE)	80 ℃
10. FULL LOAD SPEED	1700/815 RPM
11. FULL LOAD CURRENT	3.6/3.1 A
12. STARTING CURRENT AT RATED VOLTAGE	17.8/10.85 A
13. MINIMUM STARTING VOLTAGE	400 V
14. EFFICIENCY AT 100% RATED LOAD	69.5/63 %
15. POWER FACTOR AT 100% RATED LOAD	74/50 %
16. STARTING TORQUE	1.48/1.22 KG.M
17. SITE ALTTITUDE(UNDER)	1000 M
18. ENCLOSURE & COOLING METHOD	T E N V
19. TYPE OF BEARING	PL : 6206zz OPL : 6206zz
20. MOUNTING	H O R I Z O N T A L
21. MAXIMUM AMBIENT TEMPURE	40 ℃
22. BEARING LUBRICATION	G R E A S E
23. STARTING METHOD	F U L L V O L T A G E

산업재해예방 안전보건공단
KOREA OCCUPATIONAL SAFETY & HEALTH AGENCY

192.168.11.76 / 2013-12-17 15:49:47

불법복제 및 배포금지

THREE PHASE INDUCTION MOTOR DATE SHEET

SCHEDULE OF TECHNICAL DATA

1. SERVICE	TRAVERSING
2. MANUFACTURE	극동호이스트(주)
3. FRAME NUMBER	90 L
4. RATED POWER	1.5/0.75 KW x 4/8 P
5. RATED VOLTAGE AND FREQUENCY	460 V 60 Hz
6. MOTOR TYPE	SQUIRREL CAGE ROTOR TYPE
7. SERVICE FACTOR AND RATTING	1 . 0 , 30 MIN
8. LOCATION AND INSULATION CLASS	INDOOR, OUTDOOR, B CLASS
9. DESIGN TRMPERATURE RISE(BY RESISTANCE)	80 ℃
10. FULL LOAD SPEED	1700/815 RPM
11. FULL LOAD CURRENT	3.44/2.96 A
12. STARTING CURRENT AT RATED VOLTAGE	16.99/10.36 A
13. MINIMUM STARTING VOLTAGE	418 V
14. EFFICIENCY AT 100% RATED LOAD	69.5/63 %
15. POWER FACTOR AT 100% RATED LOAD	74/50 %
16. STARTING TORQUE	1.48/1.22 KG.M
17. SITE ALTITUDE(UNDER)	1000 M
18. ENCLOSURE & COOLING METHOD	T E N V
19. TYPE OF BEARING	PL : 6206zz OPL : 6206zz
20. MOUNTING	H O R I Z O N T A L
21. MAXIMUM AMBIENT TEMPURE	40 ℃
22. BEARING LUBRICATION	G R E A S E
23. STARTING METHOD	F U L L V O L T A G E

산업재해예방
안전보건공단
KOREA OCCUPATIONAL SAFETY & HEALTH AGENCY

192.168.11.76 / 2013-12-17 15:49:47

불법복제 및 배포금지

THREE PHASE INDUCTION MOTOR DATE SHEET

SCHEDULE OF TECHNICAL DATA

1. SERVICE	TRAVERSING
2. MANUFACTURE	극동호이스트(주)
3. FRAME NUMBER	90 L
4. RATED POWER	1.5/0.75 KW x 4/8 P
5. RATED VOLTAGE AND FREQUENCY	480 V 60 Hz
6. MOTOR TYPE	SQUIRREL CAGE ROTOR TYPE
7. SERVICE FACTOR AND RATTING	1 . 0 , 30 MIN
8. LOCATION AND INSULATION CLASS	INDOOR, OUTDOOR, B CLASS
9. DESIGN TRMPERATURE RISE(BY RESISTANCE)	80 ℃
10. FULL LOAD SPEED	1700/815 RPM
11. FULL LOAD CURRENT	3.0/2.96 A
12. STARTING CURRENT AT RATED VOLTAGE	14.82/10.36 A
13. MINIMUM STARTING VOLTAGE	436 V
14. EFFICIENCY AT 100% RATED LOAD	69.5/63 %
15. POWER FACTOR AT 100% RATED LOAD	74/50 %
16. STARTING TORQUE	1.48/1.22 KG.M
17. SITE ALTTITUDE(UNDER)	1000 M
18. ENCLOSURE & COOLING METHOD	T E N V
19. TYPE OF BEARING	PL : 6206zz OPL : 6206zz
20. MOUNTING	H O R I Z O N T A L
21. MAXIMUM AMBIENT TEMPURE	40 ℃
22. BEARING LUBRICATION	G R E A S E
23. STARTING METHOD	F U L L V O L T A G E

검사
한국산업안전보건공단
산업재해예방
안전보건공단
KOREA OCCUPATIONAL SAFETY & HEALTH AGENCY
192.168.11.76 / 2013-12-17 15:49:47

불법복제 및 배포금지

THREE PHASE INDUCTION MOTOR DATE SHEET

SCHEDULE OF TECHNICAL DATA

1. SERVICE	TRAVERSING
2. MANUFACTURE	극동호이스트(주)
3. FRAME NUMBER	90 L
4. RATED POWER	1.0/0.5 KW x 6/12 P
5. RATED VOLTAGE AND FREQUENCY	220 V 60 Hz
6. MOTOR TYPE	SQUIRREL CAGE ROTOR TYPE
7. SERVICE FACTOR AND RATTING	1 . 0 , 30 MIN
8. LOCATION AND INSULATION CLASS	INDOOR, OUTDOOR, B CLASS
9. DESIGN TRMPERATURE RISE(BY RESISTANCE)	80 ℃
10. FULL LOAD SPEED	1050/460 RPM
11. FULL LOAD CURRENT	7.1/7.5 A
12. STARTING CURRENT AT RATED VOLTAGE	28.3/22.5 A
13. MINIMUM STARTING VOLTAGE	200 V
14. EFFICIENCY AT 100% RATED LOAD	59.5/35.0 %
15. POWER FACTOR AT 100% RATED LOAD	64.5/54.0 %
16. STARTING TORQUE	1.67/1.48 KG.M
17. SITE ALTTITUDE(UNDER)	1000 M
18. ENCLOSURE & COOLING METHOD	T E N V
19. TYPE OF BEARING	PL : 6206zz OPL : 6206zz
20. MOUNTING	H O R I Z O N T A L
21. MAXIMUM AMBIENT TEMPURE	40 ℃
22. BEARING LUBRICATION	G R E A S E
23. STARTING METHOD	F U L L V O L T A G E

산업재해예방
안전보건공단
KOREA OCCUPATIONAL SAFETY & HEALTH AGENCY

192.168.11.76 / 2013-12-17 15:49:47

불법복제 및 배포금지

THREE PHASE INDUCTION MOTOR DATE SHEET

SCHEDULE OF TECHNICAL DATA

1. SERVICE	TRAVERSING
2. MANUFACTURE	극동호이스트(주)
3. FRAME NUMBER	90 L
4. RATED POWER	1.0/0.5 KW x 6/12 P
5. RATED VOLTAGE AND FREQUENCY	380 V 60 Hz
6. MOTOR TYPE	SQUIRREL CAGE ROTOR TYPE
7. SERVICE FACTOR AND RATTING	1.0 , 30 MIN
8. LOCATION AND INSULATION CLASS	INDOOR, OUTDOOR, B CLASS
9. DESIGN TRMPERATURE RISE(BY RESISTANCE)	80 ℃
10. FULL LOAD SPEED	1050/460 RPM
11. FULL LOAD CURRENT	4.1/4.3 A
12. STARTING CURRENT AT RATED VOLTAGE	16.4/13.0 A
13. MINIMUM STARTING VOLTAGE	345 V
14. EFFICIENCY AT 100% RATED LOAD	59.5/35.0 %
15. POWER FACTOR AT 100% RATED LOAD	64.5/54.0 %
16. STARTING TORQUE	1.67/1.48 KG.M
17. SITE ALTTITUDE(UNDER)	1000 M
18. ENCLOSURE & COOLING METHOD	TENV
19. TYPE OF BEARING	PL : 6206zz OPL : 6206zz
20. MOUNTING	HORIZONTAL
21. MAXIMUM AMBIENT TEMPURE	40 ℃
22. BEARING LUBRICATION	GREASE
23. STARTING METHOD	FULL VOLTAGE

검사
한국산업안전보건공단
산업재해예방
안전보건공단
KOREA OCCUPATIONAL SAFETY & HEALTH AGENCY
192.168.11.76 / 2013-12-17 15:49:47

불법복제 및 배포금지

THREE PHASE INDUCTION MOTOR DATE SHEET

SCHEDULE OF TECHNICAL DATA

1. SERVICE	TRAVERSING
2. MANUFACTURE	극동호이스트(주)
3. FRAME NUMBER	90 L
4. RATED POWER	1.0/0.5 KW x 6/12 P
5. RATED VOLTAGE AND FREQUENCY	440 V 60 Hz
6. MOTOR TYPE	SQUIRREL CAGE ROTOR TYPE
7. SERVICE FACTOR AND RATTING	1 . 0 , 30 MIN
8. LOCATION AND INSULATION CLASS	INDOOR, OUTDOOR, B CLASS
9. DESIGN TRMPERATURE RISE(BY RESISTANCE)	80 ℃
10. FULL LOAD SPEED	1050/460 RPM
11. FULL LOAD CURRENT	3.5/3.7 A
12. STARTING CURRENT AT RATED VOLTAGE	14.2/12.3 A
13. MINIMUM STARTING VOLTAGE	400 V
14. EFFICIENCY AT 100% RATED LOAD	59.5/35.0 %
15. POWER FACTOR AT 100% RATED LOAD	64.5/54.0 %
16. STARTING TORQUE	1.67/1.48 KG.M
17. SITE ALTTITUDE(UNDER)	1000 M
18. ENCLOSURE & COOLING METHOD	T E N V
19. TYPE OF BEARING	PL : 6206zz OPL : 6206zz
20. MOUNTING	H O R I Z O N T A L
21. MAXIMUM AMBIENT TEMPURE	40 ℃
22. BEARING LUBRICATION	G R E A S E
23. STARTING METHOD	F U L L V O L T A G E

검사필
KGS
한국산업안전보건공단
산업재해예방
안전보건공단
KOREA OCCUPATIONAL SAFETY & HEALTH AGENCY
192.168.11.76 / 2013-12-17 15:49:47

불법복제 및 배포금지

THREE PHASE INDUCTION MOTOR DATE SHEET

SCHEDULE OF TECHNICAL DATA

1. SERVICE	TRAVERSING
2. MANUFACTURE	극동호이스트(주)
3. FRAME NUMBER	90 L
4. RATED POWER	1.0/0.5 KW x 6/12 P
5. RATED VOLTAGE AND FREQUENCY	460 V 60 Hz
6. MOTOR TYPE	SQUIRREL CAGE ROTOR TYPE
7. SERVICE FACTOR AND RATTING	1 . 0 , 30 MIN
8. LOCATION AND INSULATION CLASS	INDOOR, OUTDOOR, B CLASS
9. DESIGN TRMPERATURE RISE(BY RESISTANCE)	80 ℃
10. FULL LOAD SPEED	1050/460 RPM
11. FULL LOAD CURRENT	3.4/3.6 A
12. STARTING CURRENT AT RATED VOLTAGE	13.5/10.8 A
13. MINIMUM STARTING VOLTAGE	418 V
14. EFFICIENCY AT 100% RATED LOAD	59.5/35.0 %
15. POWER FACTOR AT 100% RATED LOAD	64.5/54.0 %
16. STARTING TORQUE	1.67/1.48 KG.M
17. SITE ALTTITUDE(UNDER)	1000 M
18. ENCLOSURE & COOLING METHOD	T E N V
19. TYPE OF BEARING	PL : 6206zz OPL : 6206zz
20. MOUNTING	H O R I Z O N T A L
21. MAXIMUM AMBIENT TEMPURE	40 ℃
22. BEARING LUBRICATION	G R E A S E
23. STARTING METHOD	F U L L V O L T A G E

검사필
한국산업안전보건공단
산업재해예방
안전보건공단
KOREA OCCUPATIONAL SAFETY & HEALTH AGENCY
192.168.11.76 / 2013-12-17 15:49:47

불법복제 및 배포금지

THREE PHASE INDUCTION MOTOR DATE SHEET

SCHEDULE OF TECHNICAL DATA

1. SERVICE	TRAVERSING
2. MANUFACTURE	극동호이스트(주)
3. FRAME NUMBER	90 L
4. RATED POWER	1.0/0.5 KW x 6/12 P
5. RATED VOLTAGE AND FREQUENCY	480 V 60 Hz
6. MOTOR TYPE	SQUIRREL CAGE ROTOR TYPE
7. SERVICE FACTOR AND RATTING	1 . 0 , 30 MIN
8. LOCATION AND INSULATION CLASS	INDOOR, OUTDOOR, B CLASS
9. DESIGN TRMPERATURE RISE(BY RESISTANCE)	80 ℃
10. FULL LOAD SPEED	1050/460 RPM
11. FULL LOAD CURRENT	3.2/3.4 A
12. STARTING CURRENT AT RATED VOLTAGE	13.0/10.3 A
13. MINIMUM STARTING VOLTAGE	436 V
14. EFFICIENCY AT 100% RATED LOAD	59.5/35.0 %
15. POWER FACTOR AT 100% RATED LOAD	64.5/54.0 %
16. STARTING TORQUE	1.67/1.48 KG.M
17. SITE ALTTITUDE(UNDER)	1000 M
18. ENCLOSURE & COOLING METHOD	T E N V
19. TYPE OF BEARING	PL : 6206zz OPL : 6206zz
20. MOUNTING	H O R I Z O N T A L
21. MAXIMUM AMBIENT TEMPURE	40 ℃
22. BEARING LUBRICATION	G R E A S E
23. STARTING METHOD	F U L L V O L T A G E

검사필
한국산업안전보건공단
산업재해예방
안전보건공단
KOREA OCCUPATIONAL SAFETY & HEALTH AGENCY
192.168.11.76 / 2013-12-17 15:49:47

불법복제 및 배포금지

THREE PHASE INDUCTION MOTOR DATE SHEET

SCHEDULE OF TECHNICAL DATA

1. SERVICE	HOISTING
2. MANUFACTURE	극동호이스트 (주)
3. FRAME NUMBER	132 M
4. RATED POWER	5.5 KW x 6 P
5. RATED VOLTAGE AND FREQUENCY	220 V 60 Hz
6. MOTOR TYPE	SQUIRREL CAGE ROTOR TYPE
7. SERVICE FACTOR AND RATTING	1.0 , 30 MIN
8. LOCATION AND INSULATION CLASS	INDOOR, OUTDOOR, B CLASS
9. DESIGN TRMPERATURE RISE(BY RESISTANCE)	80 ℃
10. FULL LOAD SPEED	1164 RPM
11. FULL LOAD CURRENT	28.2 A
12. LOCKED ROTOR CURRENT	155.1 A
13. MINIMUM STARTING VOLTAGE	200 V
14. EFFICIENCY AT 100% RATED LOAD	77 %
15. POWER FACTOR AT 100% RATED LOAD	66.4 %
16. FULL LOAD TORQUE	11.59 KG.M
17. SITE ALTTITUDE(UNDER)	1000 M
18. ENCLOSURE & COOLING METHOD	T E N V
19. TYPE OF BEARING	PL : 6307zz OPL : 6207zz
20. MOUNTING	H O R I Z O N T A L
21. MAXIMUM AMBIENT TEMPURE	40 ℃
22. BEARING LUBRICATION	G R E A S E
23. STARTING METHOD	F U L L V O L T A G E

사업장 대표
한국산업안전보건공단
사업재해예방
안전보건공단
KOREA OCCUPATIONAL SAFETY & HEALTH AGENCY
192.168.11.76 / 2013-12-17 15:49:47

불법복제 및 배포금지

THREE PHASE INDUCTION MOTOR DATE SHEET

SCHEDULE OF TECHNICAL DATA

1. SERVICE	HOISTING
2. MANUFACTURE	극동호이스트 (주)
3. FRAME NUMBER	132 M
4. RATED POWER	5.5 KW x 6 P
5. RATED VOLTAGE AND FREQUENCY	380 V 60 Hz
6. MOTOR TYPE	SQUIRREL CAGE ROTOR TYPE
7. SERVICE FACTOR AND RATTING	1.0 , 30 MIN
8. LOCATION AND INSULATION CLASS	INDOOR, OUTDOOR, B CLASS
9. DESIGN TRMPERATURE RISE(BY RESISTANCE)	80 ℃
10. FULL LOAD SPEED	1164 RPM
11. FULL LOAD CURRENT	16.3 A
12. LOCKED ROTOR CURRENT	89.8 A
13. MINIMUM STARTING VOLTAGE	345 V
14. EFFICIENCY AT 100% RATED LOAD	77 %
15. POWER FACTOR AT 100% RATED LOAD	66.4 %
16. FULL LOAD TORQUE	11.59 KG.M
17. SITE ALTTITUDE(UNDER)	1000 M
18. ENCLOSURE & COOLING METHOD	TENV
19. TYPE OF BEARING	PL : 6307zz OPL : 6207zz
20. MOUNTING	HORIZONTAL
21. MAXIMUM AMBIENT TEMPURE	40 ℃
22. BEARING LUBRICATION	GREASE
23. STARTING METHOD	FULL VOLTAGE

검사필
한국산업안전보건공단
산업재해예방
안전보건공단
KOREA OCCUPATIONAL SAFETY & HEALTH AGENCY
192.168.11.76 / 2013-12-17 15:49:47

불법복제 및 배포금지

THREE PHASE INDUCTION MOTOR DATE SHEET

SCHEDULE OF TECHNICAL DATA

1. SERVICE	HOISTING
2. MANUFACTURE	극동호이스트 (주)
3. FRAME NUMBER	132 M
4. RATED POWER	5.5 KW x 6 P
5. RATED VOLTAGE AND FREQUENCY	440 V 60 Hz
6. MOTOR TYPE	SQUIRREL CAGE ROTOR TYPE
7. SERVICE FACTOR AND RATTING	1.0 , 30 MIN
8. LOCATION AND INSULATION CLASS	INDOOR, OUTDOOR, B CLASS
9. DESIGN TRMPERATURE RISE(BY RESISTANCE)	80 ℃
10. FULL LOAD SPEED	1164 RPM
11. FULL LOAD CURRENT	14.1 A
12. LOCKED ROTOR CURRENT	77.6 A
13. MINIMUM STARTING VOLTAGE	400 V
14. EFFICIENCY AT 100% RATED LOAD	77 %
15. POWER FACTOR AT 100% RATED LOAD	66.4 %
16. FULL LOAD TORQUE	11.59 KG.M
17. SITE ALTTITUDE(UNDER)	1000 M
18. ENCLOSURE & COOLING METHOD	TENV
19. TYPE OF BEARING	PL : 6307zz OPL : 6207zz
20. MOUNTING	HORIZONTAL
21. MAXIMUM AMBIENT TEMPURE	40 ℃
22. BEARING LUBRICATION	GREASE
23. STARTING METHOD	FULL VOLTAGE

산업재해예방
아시아건강단
KOREA OCCUPATIONAL SAFETY & HEALTH AGENCY
192.168.11.76 / 2013-12-17 15:49:47

불법복제 및 배포금지

THREE PHASE INDUCTION MOTOR DATE SHEET

SCHEDULE OF TECHNICAL DATA

1. SERVICE	HOISTING
2. MANUFACTURE	극동호이스트 (주)
3. FRAME NUMBER	132 M
4. RATED POWER	5.5 KW x 6 P
5. RATED VOLTAGE AND FREQUENCY	460 V 60 Hz
6. MOTOR TYPE	SQUIRREL CAGE ROTOR TYPE
7. SERVICE FACTOR AND RATTING	1.0 , 30 MIN
8. LOCATION AND INSULATION CLASS	INDOOR, OUTDOOR, B CLASS
9. DESIGN TRMPERATURE RISE(BY RESISTANCE)	80 ℃
10. FULL LOAD SPEED	1164 RPM
11. FULL LOAD CURRENT	13.5 A
12. LOCKED ROTOR CURRENT	74.3 A
13. MINIMUM STARTING VOLTAGE	418 V
14. EFFICIENCY AT 100% RATED LOAD	77 %
15. POWER FACTOR AT 100% RATED LOAD	66.4 %
16. FULL LOAD TORQUE	11.59 KG.M
17. SITE ALTTITUDE(UNDER)	1000 M
18. ENCLOSURE & COOLING METHOD	T E N V
19. TYPE OF BEARING	PL : 6307zz OPL : 6207zz
20. MOUNTING	H O R I Z O N T A L
21. MAXIMUM AMBIENT TEMPURE	40 ℃
22. BEARING LUBRICATION	G R E A S E
23. STARTING METHOD	F U L L V O L T A G E

검사 대상
한국산업안전보건공단
산업재해예방 안전보건공단
KOREA OCCUPATIONAL SAFETY & HEALTH AGENCY
192.168.11.76 / 2013-12-17 15:49:47

불법복제 및 배포금지

THREE PHASE INDUCTION MOTOR DATE SHEET

SCHEDULE OF TECHNICAL DATA

1. SERVICE	HOISTING
2. MANUFACTURE	극동호이스트 (주)
3. FRAME NUMBER	132 M
4. RATED POWER	5.5 KW x 6 P
5. RATED VOLTAGE AND FREQUENCY	480 V 60 Hz
6. MOTOR TYPE	SQUIRREL CAGE ROTOR TYPE
7. SERVICE FACTOR AND RATTING	1.0 , 30 MIN
8. LOCATION AND INSULATION CLASS	INDOOR, OUTDOOR, B CLASS
9. DESIGN TRMPERATURE RISE(BY RESISTANCE)	80 ℃
10. FULL LOAD SPEED	1164 RPM
11. FULL LOAD CURRENT	12.9 A
12. LOCKED ROTOR CURRENT	71.2 A
13. MINIMUM STARTING VOLTAGE	436 V
14. EFFICIENCY AT 100% RATED LOAD	77 %
15. POWER FACTOR AT 100% RATED LOAD	66.4 %
16. FULL LOAD TORQUE	11.59 KG.M
17. SITE ALTTITUDE(UNDER)	1000 M
18. ENCLOSURE & COOLING METHOD	T E N V
19. TYPE OF BEARING	PL : 6307zz OPL : 6207zz
20. MOUNTING	H O R I Z O N T A L
21. MAXIMUM AMBIENT TEMPURE	40 ℃
22. BEARING LUBRICATION	G R E A S E
23. STARTING METHOD	F U L L V O L T A G E

사업재해예방 안전보건공단 KOREA OCCUPATIONAL SAFETY & HEALTH AGENCY

192.168.11.76 / 2013-12-17 15:49:47

불법복제 및 배포금지

THREE PHASE INDUCTION MOTOR DATE SHEET

SCHEDULE OF TECHNICAL DATA

1. SERVICE	CREEP HOISTING
2. MANUFACTURE	극동호이스트 (주)
3. FRAME NUMBER	90 L
4. RATED POWER	1.0 KW x 6 P
5. RATED VOLTAGE AND FREQUENCY	220 V 60 Hz
6. MOTOR TYPE	SQUIRREL CAGE ROTOR TYPE
7. SERVICE FACTOR AND RATTING	1.0 , 30 MIN
8. LOCATION AND INSULATION CLASS	INDOOR, OUTDOOR, B CLASS
9. DESIGN TRMPERATURE RISE(BY RESISTANCE)	80 ℃
10. FULL LOAD SPEED	1164 RPM
11. FULL LOAD CURRENT	6.7 A
12. LOCKED ROTOR CURRENT	23.8 A
13. MINIMUM STARTING VOLTAGE	200 V
14. EFFICIENCY AT 100% RATED LOAD	63.5 %
15. POWER FACTOR AT 100% RATED LOAD	62 %
16. FULL LOAD TORQUE	1.6 KG.M
17. SITE ALTTITUDE(UNDER)	1000 M
18. ENCLOSURE & COOLING METHOD	T E N V
19. TYPE OF BEARING	PL : 6205zz OPL : 6204zz
20. MOUNTING	H O R I Z O N T A L
21. MAXIMUM AMBIENT TEMPURE	40 ℃
22. BEARING LUBRICATION	G R E A S E
23. STARTING METHOD	F U L L V O L T A G E

검사 한국산업안전공단
사업재해예방 안전보건공단 KOREA OCCUPATIONAL SAFETY & HEALTH AGENCY
192.168.11.76 / 2013-12-17 15:49:47

불법복제 및 배포금지

THREE PHASE INDUCTION MOTOR DATE SHEET

SCHEDULE OF TECHNICAL DATA

1. SERVICE	CREEP HOISTING
2. MANUFACTURE	극동호이스트 (주)
3. FRAME NUMBER	90 L
4. RATED POWER	1.0 KW x 6 P
5. RATED VOLTAGE AND FREQUENCY	380 V 60 Hz
6. MOTOR TYPE	SQUIRREL CAGE ROTOR TYPE
7. SERVICE FACTOR AND RATTING	1.0 , 30 MIN
8. LOCATION AND INSULATION CLASS	INDOOR, OUTDOOR, B CLASS
9. DESIGN TRMPERATURE RISE(BY RESISTANCE)	80 ℃
10. FULL LOAD SPEED	1164 RPM
11. FULL LOAD CURRENT	3.9 A
12. LOCKED ROTOR CURRENT	13.8 A
13. MINIMUM STARTING VOLTAGE	345 V
14. EFFICIENCY AT 100% RATED LOAD	63.5 %
15. POWER FACTOR AT 100% RATED LOAD	62 %
16. FULL LOAD TORQUE	1.6 KG.M
17. SITE ALTTITUDE(UNDER)	1000 M
18. ENCLOSURE & COOLING METHOD	T E N V
19. TYPE OF BEARING	PL : 6205zz OPL : 6204zz
20. MOUNTING	H O R I Z O N T A L
21. MAXIMUM AMBIENT TEMPURE	40 ℃
22. BEARING LUBRICATION	G R E A S E
23. STARTING METHOD	F U L L V O L T A G E

검 사 필
한국산업안전보건공단
산업재해예방
안전보건공단
KOREA OCCUPATIONAL SAFETY & HEALTH AGENCY
192.168.11.76 / 2013-12-17 15:49:47

불법복제 및 배포금지

THREE PHASE INDUCTION MOTOR DATE SHEET

SCHEDULE OF TECHNICAL DATA

1. SERVICE	CREEP HOISTING
2. MANUFACTURE	극동호이스트 (주)
3. FRAME NUMBER	90 L
4. RATED POWER	1.0 KW x 6 P
5. RATED VOLTAGE AND FREQUENCY	440 V 60 Hz
6. MOTOR TYPE	SQUIRREL CAGE ROTOR TYPE
7. SERVICE FACTOR AND RATTING	1.0 , 30 MIN
8. LOCATION AND INSULATION CLASS	INDOOR, OUTDOOR, B CLASS
9. DESIGN TRMPERATURE RISE(BY RESISTANCE)	80 ℃
10. FULL LOAD SPEED	1164 RPM
11. FULL LOAD CURRENT	3.3 A
12. LOCKED ROTOR CURRENT	11.9 A
13. MINIMUM STARTING VOLTAGE	400 V
14. EFFICIENCY AT 100% RATED LOAD	63.5 %
15. POWER FACTOR AT 100% RATED LOAD	62 %
16. FULL LOAD TORQUE	1.6 KG.M
17. SITE ALTTITUDE(UNDER)	1000 M
18. ENCLOSURE & COOLING METHOD	T.E.F.C
19. TYPE OF BEARING	PL : 6205zz OPL : 6204zz
20. MOUNTING	HORIZONTAL
21. MAXIMUM AMBIENT TEMPURE	40 ℃
22. BEARING LUBRICATION	GREASE
23. STARTING METHOD	FULL VOLTAGE

사업재해예방
안전보건공단
KOREA OCCUPATIONAL SAFETY & HEALTH AGENCY
192.168.11.76 / 2013-12-17 15:49:47

불법복제 및 배포금지

THREE PHASE INDUCTION MOTOR DATE SHEET

SCHEDULE OF TECHNICAL DATA

1. SERVICE	CREEP HOISTING
2. MANUFACTURE	극동호이스트 (주)
3. FRAME NUMBER	90 L
4. RATED POWER	1.0 KW x 6 P
5. RATED VOLTAGE AND FREQUENCY	460 V 60 Hz
6. MOTOR TYPE	SQUIRREL CAGE ROTOR TYPE
7. SERVICE FACTOR AND RATTING	1.0 , 30 MIN
8. LOCATION AND INSULATION CLASS	INDOOR, OUTDOOR, B CLASS
9. DESIGN TRMPERATURE RISE(BY RESISTANCE)	80 ℃
10. FULL LOAD SPEED	1164 RPM
11. FULL LOAD CURRENT	3.2 A
12. LOCKED ROTOR CURRENT	11.4 A
13. MINIMUM STARTING VOLTAGE	418 V
14. EFFICIENCY AT 100% RATED LOAD	63.5 %
15. POWER FACTOR AT 100% RATED LOAD	62 %
16. FULL LOAD TORQUE	1.6 KG.M
17. SITE ALTTITUDE(UNDER)	1000 M
18. ENCLOSURE & COOLING METHOD	T E F C
19. TYPE OF BEARING	PL : 6205zz OPL : 6204zz
20. MOUNTING	H O R I Z O N T A L
21. MAXIMUM AMBIENT TEMPURE	40 ℃
22. BEARING LUBRICATION	G R E A S E
23. STARTING METHOD	F U L L V O L T A G E

사업재해예방 안전보건공단 KOREA OCCUPATIONAL SAFETY & HEALTH AGENCY

192.168.11.76 / 2013-12-17 15:49:47

불법복제 및 배포금지

THREE PHASE INDUCTION MOTOR DATE SHEET

SCHEDULE OF TECHNICAL DATA

1. SERVICE	CREEP HOISTING
2. MANUFACTURE	극동호이스트 (주)
3. FRAME NUMBER	90 L
4. RATED POWER	1.0 KW x 6 P
5. RATED VOLTAGE AND FREQUENCY	480 V 60 Hz
6. MOTOR TYPE	SQUIRREL CAGE ROTOR TYPE
7. SERVICE FACTOR AND RATTING	1.0 , 30 MIN
8. LOCATION AND INSULATION CLASS	INDOOR, OUTDOOR, B CLASS
9. DESIGN TRMPERATURE RISE(BY RESISTANCE)	80 ℃
10. FULL LOAD SPEED	1164 RPM
11. FULL LOAD CURRENT	3.1 A
12. LOCKED ROTOR CURRENT	10.9 A
13. MINIMUM STARTING VOLTAGE	436 V
14. EFFICIENCY AT 100% RATED LOAD	63.5 %
15. POWER FACTOR AT 100% RATED LOAD	62 %
16. FULL LOAD TORQUE	1.6 KG.M
17. SITE ALTTITUDE(UNDER)	1000 M
18. ENCLOSURE & COOLING METHOD	TENV
19. TYPE OF BEARING	PL : 6205zz OPL : 6204zz
20. MOUNTING	HORIZONTAL
21. MAXIMUM AMBIENT TEMPURE	40 ℃
22. BEARING LUBRICATION	GREASE
23. STARTING METHOD	FULL VOLTAGE

검사필
한국산업안전보건공단
산업재해예방
안전보건공단
KOREA OCCUPATIONAL SAFETY & HEALTH AGENCY
192.168.11.76 / 2013-12-17 15:49:47

불법복제 및 배포금지

SUB VENDOR LIST

구분	NO	DESCRIPTION	SUB VENDOR	TEL NO.	REMARK
기계	1	WIRE ROPE	반호 로우프(주)	051-332-3131	
			고려제강 (주)	02-776-4131	
	2	MAGNET CORE	극동호이스트(주)	031-491-5311	
	3	DRUM	극동호이스트(주)	031-491-5311	
	4	GEAR	극동호이스트(주)	031-491-5311	
	5	HOOK ASS'Y	제 일 단 철	032-527-2817	
			대 흥 단 조	032-561-0541	
	6	MIDDLE SHAFT	극동호이스트(주)	031-491-5311	
	7	RAIL CHANNEL ANGLE	인천제철(주)	032-763-5000	
			강원산업(주)	032-756-8881	
전기	8	MAG CONTACTOR	L.G 전선 (주)	02-273-4140	전 품
			(주) 대 륙	02-242-4141	한국공업협회
			(주) 대성디에스	055-338-3125	
	9	E.O.C.R	삼화기연 (주)	032-62-1331	K.S
			아산 전기	02-2636-8035	
	10	PUSH BUTTON	한영전기 (주	02-742-0430	전 품
			(주)케이지오토	02-247-3131	전 품
			반도기계 (주)	031-495-8353-4	전 품
	11	LOAD LIMITER	보 창 기 전	032-431-0150	산 안 검
			반도기계 (주)	031-495-8353-4	산 안 검
			정호 엔지니어링	02-681-0553	산 안 검
	12	SILICON	반도기계 (주)	031-495-8353-4	
			아산 전기	02-2636-8035	
			보 창 기 전	032-431-0150	

산업재해예방 안전보건공단
KOREA OCCUPATIONAL SAFETY & HEALTH AGENCY
192.168.11.76 / 2013-12-17 15:49:47

불법복제 및 배포금지

KISWIRE

ORIGINAL

CERT NO. 200704WRS59100 DATE *Jun. 08, 2009*

MILL TEST CERTIFICATE

THIS IS TO CERTIFY THAT THE MATERIAL DESCRIBED BELOW WAS MANUFACTURED IN ACCORDANCE WITH KISWIRE LTD SPECIFICATION AND APPLICABLE SECTIONS

OF KSD 3514 - 2002 (B Grade)

TO MESSRS 삼진로프

MATERIAL DESCRIPTION UNGALVANIZED STEEL WIRE ROPE

06 X 37 + FC 1000 M X 5 REEL

EX NO.

ORDER NO. REEL NO. 1 ~ 5 SAMPLING NO. 1

DIAMETER OF ROPE 22.400 mm TYPE OF CORE Fiber Core

SPECIFIED BREAKING LOAD 284.00 kN SAMPLE BROKE AT 294.20 kN

WT. OF ZINC COATING OF OUTER WIRE MIN. g/㎡

ROPE LAY RHRL LAY LENGTH 144.1 mm

LUBRICATION A-2

CHEMICAL ANALYSIS OF WIRE ROD

CHARGE NO.	C X 100	Si X 100	Mn X 100	P X 1000	S X 1000
SA61155	71	21	69	11	4

DATE OF SAMPLE TEST *May. 09, 2007*

Approved by Q.C Manager K.H. Bae
KISWIRE LTD., KOREA

KS JIS API ABS KR NK G.Lloyd's DNV L.R BV

사업재해예방 아저보건공단
KOREA OCCUPATIONAL SAFETY & HEALTH AGENCY

192.168.11.76 / 2013-12-17 15:49:47

불법복제 및 배포금지

ORIGINAL

KISWIRE
KISWIRE QINGDAO LTD.
No.600 Chuangye Road, Qingdao Development Zone, Shangdong,P.R.China
Tel : 86-532-86821916, Fax :86-532-86821949 www.kiswire.com

ISSUE NO. PW9034 DATE *Feb. 19, 2010*

MILL TEST CERTIFICATE

THIS IS TO CERTIFY THAT THE MATERIAL DESCRIBED BELOW WAS MANUFACTURED IN ACCORDANCE WITH KISWIRE LTD SPECIFICATION AND APPLICABLE SECTIONS

OF **KSD 3514** (B Grade)

TO MESSRS KISWIRE LTD.

MATERIAL DESCRIPTION UNGALVANIZED STEEL WIRE ROPE

06 X 37 + FC 1000M X 3 REEL

EX NO. PW9034 T/T NO.

ORDER NO. REEL NO. 1~3 SAMPLING NO. 1

DIAMETER OF ROPE 14.0 mm TYPE OF CORE Fiber Core

SPECIFIED BREAKING LOAD 111.0 kN SAMPLE BROKE AT 115.6 kN

WT. OF ZINC COATING OF OUTER WIRE MIN. g/m² MAX. g/m²

ROPE LAY RHRL LAY LENGTH 91.5 mm

LUBRICATION A-2

CHEMICAL ANALYSIS OF WIRE ROD

CHARGE NO.	C×100	Si×100	Mn×100	P×1000	S×1000
049844E	72	24	74	18	9

DATE OF SAMPLE TEST *Feb. 10, 2010*

CHIEF INSPECTOR D.S.NA
KISWIRE QINGDAO LTD.

산업재해예방
안전보건공단
KOREA OCCUPATIONAL SAFETY & HEALTH AGENCY

192.168.11.76 / 2013-12-17 15:49:47